OPTIMA STEAMER

PART LIST FOR XE
(Ver. G2.3.02-2021.02.01)

1. FRAME ASSEMBLY
2. FEED WATER LINE
3. TANK ASSEMBLY
4. STEAM GENERATOR (27K)
5. STEAM GENERATOR (18K)
6. STEAM GENERATOR (12K)
7. STEAM GENERATOR (05K)
8. CONTROL BOX (27K)
9. CONTROL BOX (18K, 380V/415V/440V/460V/480V/600V)
10. CONTROL BOX (18K, 200V/208V/230V)
11. CONTROL BOX (12K, 380V/415V/440V/460V/480V/600V)
12. CONTROL BOX (12K, 200V/208V/230V)
13. CONTROL BOX (05K)
14. SCHEMATIC DIAGRAM (27K)
15. SCHEMATIC DIAGRAM (18K, 380V/415V/440V/460V/480V/600V)
16. SCHEMATIC DIAGRAM (18K, 230V)
17. SCHEMATIC DIAGRAM (18K, 200V/208V)
18. SCHEMATIC DIAGRAM (12K, 380V/415V/440V/460V/480V/600V)
19. SCHEMATIC DIAGRAM (12K, 230V)
20. SCHEMATIC DIAGRAM (12K, 200V/208V)
21. SCHEMATIC DIAGRAM (05K, 230V)
22. SCHEMATIC DIAGRAM (05K, 200V/208V)
23. OPTIMA XE STICKER
24. ACCESSORIES & OPTIONAL PARTS
25. OMEGA SOFTNER(OPTIONAL)

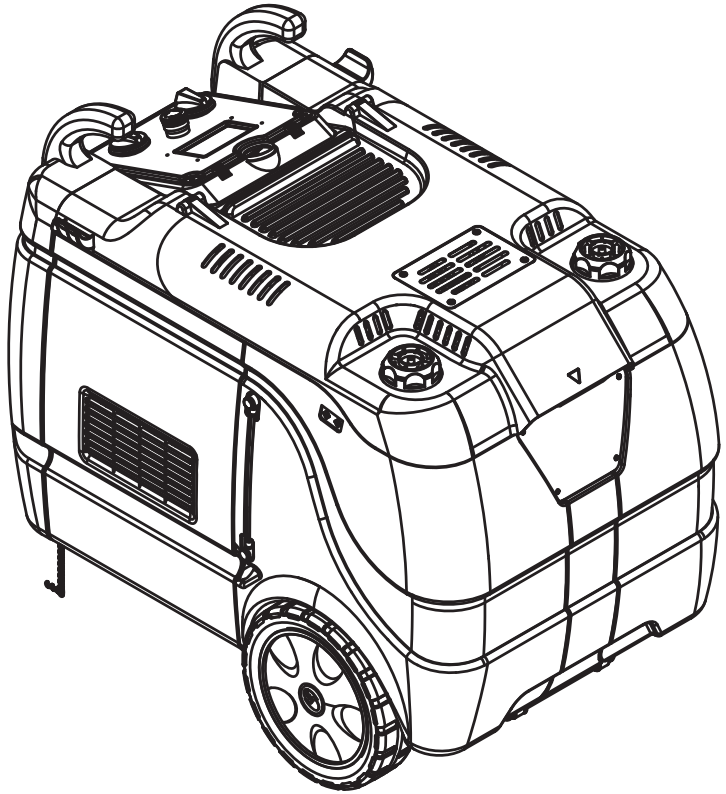

78-21, Sandan 7-Ro, Jeonggwan-Eup, Gijang-Gun, Busan, Rep. of Korea.
TEL. +82-51-521-3200 / +82-51-727-5775 FAX +82-51-521-3305
WEBSITE: http://www.sjecorp.com / E-MAIL: info@sjecorp.com

PRINTED IN KOREA

TABLE : 001

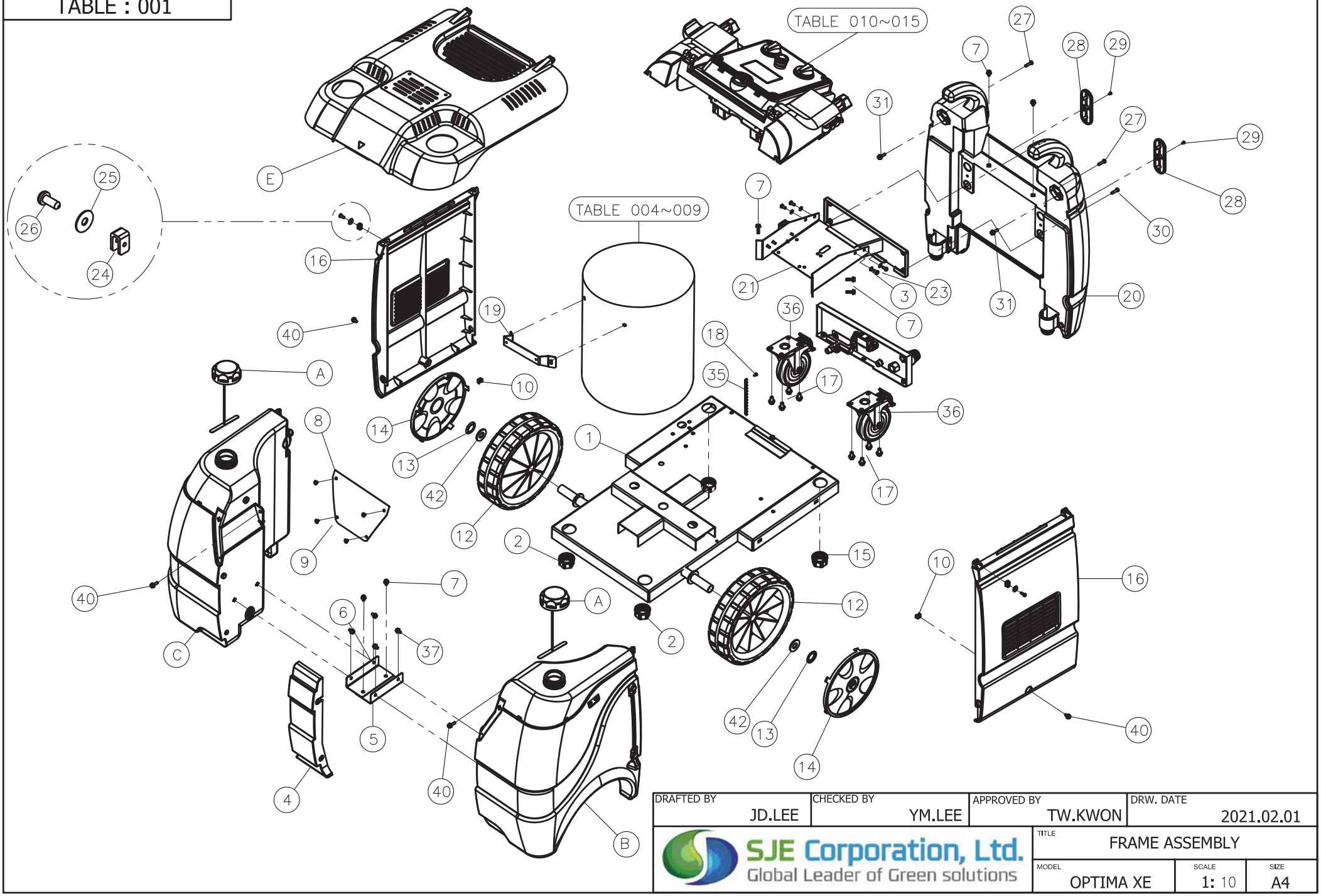

DRAFTED BY	CHECKED BY	APPROVED BY	DRW. DATE
JD.LEE	YM.LEE	TW.KWON	2021.02.01

SJE Corporation, Ltd.
Global Leader of Green solutions

TITLE			
FRAME ASSEMBLY			
MODEL		SCALE	SIZE
OPTIMA XE		1: 10	A4

TABLE NO. 001 : FRAME ASSEMBLY

REF NO.	PART NO.	DESCRIPTION	Q'TY	UNIT	MATERIAL	FROM	TO	REPLACED NO.
1	20-05003	Chassis, optima XD/E	1	EA	SS400			
2	70554	Ring nut M39x3	2	EA				
3	14-41019	Toothed lock washer M6	4	EA				
4	20-03028	Front cover, XD/E Red	1	EA	PP			
5	20-06023	Water tank fixing bracket, XD/E	1	EA	SUS			
6	20-06022	Fuel tank fixing bracket, XD/E	1	EA	SUS			
7	70422	Flange bolt M6 x 10	8	EA				
8	20-01027	Emblem plate, XD/E	1	EA	SUS			
9	14-40035	Truss head tapping screw M5 x 12 II, sus	4	EA				
10	70389	Nut M6 GB 1.7x2.5	2	EA				
12	70581	Wheel D.305-D.25 RT	2	EA				
13	70381	Wheel stopper D.25	2	EA				
14	20-03033	Wheel cover, Red-2V	2	EA	PP			
15	20-03043	Handle base fixing nut, optima 2V	2	EA	ABS			
16	20-03025	Side cover, XD/E Red	2	EA	PP			
17	70421	Flange bolt M8 x 15	8	EA				
18	70410	Flat head cap screw M4 x 10	1	EA				
19	20-06032	Tank support, 2V. XE	1	EA	SS400			
20	20-03032	Handle, optima XD/E	1	EA	HDPE			
21	20-06024	Handle support, XD/E	1	EA	SS400			
23	14-40036	Truss head tapping screw, M6 X 20	4	EA				
24	70385	Nut spring	2	EA				
25	70379	Washer D.5.5-16	6	EA				
26	14-40038	Pan head tapping screw, M5 X 16, II	2	EA				
27	14-40037	Truss head tapping screw, M6 X 30	2	EA				
28	20-03036	Handle cap, Red-2V	2	EA	PP			
29	70500	Screw T/T M4.8 x 20	2	EA				
30	24-40040	Flange bolt M8 X 60	2	EA				
31	14-40039	Flange bolt M6 X 20	2	EA				
35	71060	Ground chain, zinc	0.2	M				
36	70585	Turning wheel with brake D.125	2	EA				
37	14-40045	Pan head sems bolt M6 X 10, sus	4	EA				
40	70419	Flange bolt M6 x 16	4	EA				
42	14-41018	Plain washer M24	2	EA				
A	80-05100	Water tank Cap, Blue XD/XE	2	SET				
B	80-05105	Water tank(L) assy, XE	1	SET				
C	80-05104	Water tank(R) assy, XE	1	SET				
E	80-03045	Top Cover assy, XE Red	1	SET				

TABLE NO. 002

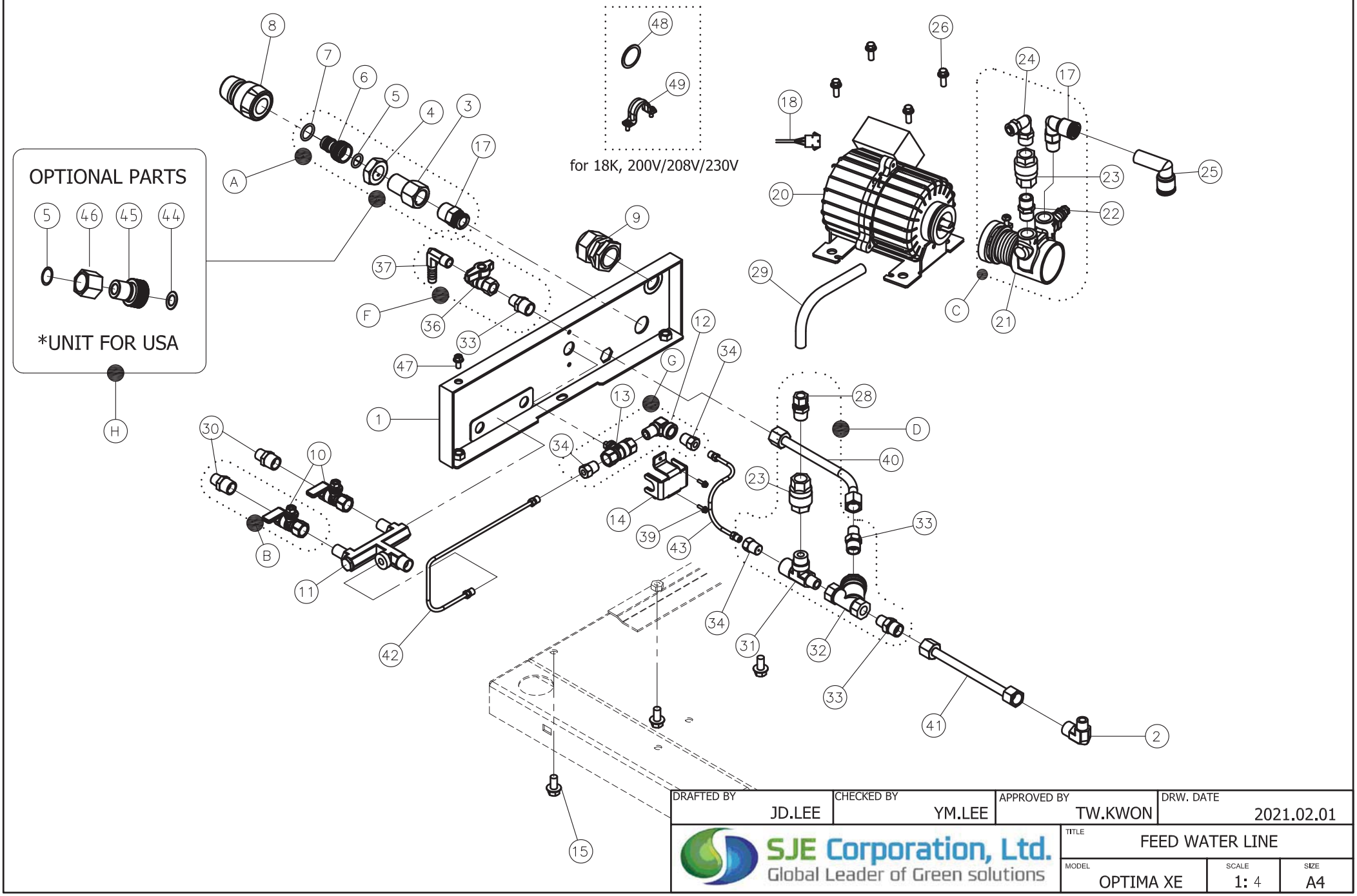

DRAFTED BY	CHECKED BY	APPROVED BY	DRW. DATE
JD.LEE	YM.LEE	TW.KWON	2021.02.01

SJE Corporation, Ltd.
Global Leader of Green solutions

TITLE: FEED WATER LINE

MODEL	SCALE	SIZE
OPTIMA XE	1: 4	A4

TABLE NO. 002 : FEED WATER LINE

REF NO.	PART NO.	DESCRIPTION	Q'TY	UNIT	MATERIAL	FROM	TO	REPLACED NO.
1	20-00002	Valve support bracket, XD/E	1	EA	SS400			
1	20-00004	Valve support bracket, XE218	(1)	EA	SS400			
2	22-20088	Bite connector elbow 10x1/4M, brass	1	EA	BRASS			
3	22-20079	Nipple PF1/2M - PT3/8F L.47	1	EA	BRASS			
4	70853	Ring nut 1/2 x 8 CH30, Setscrew Tab	1	EA	BRASS			
5	70912	O-ring D.14 x 20 x 3, G14	2	EA	NBR			
6	70615	Plug G1/2F - 10.5 for Coupling	1	EA	BRASS			
7	14-43028	O-Ring, P12, D.11.8x 2.4, NBR	1	EA	NBR			
8	70612	Couplings D. 1/2"-5/8" PTC	1	EA	PTC			
9	70320	Cable gland PG25	1	EA				
10	32-23029	Steam Ball Valve, 1/4, red, Gia.	2	EA				
11	A71662	Steam outlet 3-way assy 5V.	1	EA	BRASS			
12	70803	Elbow nipple PT1/4MF, brass	1	EA	BRASS			
13	32-23030	Steam Ball Valve, 1/4, blue, Gia.	1	EA				
14	21-12001	Moisture valve bracket, XD/E	1	EA	SS400			
15	70421	Flange bolt M8 x 15	3	EA				
17	71254	One touch fitting PL1203 (3/8)	1	EA		2021.02		
18	70987	Cables with connector, water feeding motor	1	EA				
20	71238	Motor 230V 50/60Hz, ssh	1	EA				
21	70133	Feedwater pump MO204V viton	1	EA				
22	70830	Nipple PT3/8M, brass	1	EA	BRASS	2021.02		
23	70252	Non-return valve, G3/8F, 150°C	2	EA	BRASS			
24	32-20041	Two touch elbow 10 x 8, PT3/8M	1	EA				
25	71252	One touch fitting PLJ12	1	EA		2021.02		
26	70419	Flange bolt M6 x 16	4	EA				
28	32-20043	Two touch 10 x 8, PT3/8M	1	EA		2021.02		
29	71291	Teflon tube D.10 x 8	1	M				
30	70829	Nipple 3/8PF - 1/4PT, brass	2	EA	BRASS			
31	71362	Tee-nipple PT1/4F - PT3/8M - PT1/4M	1	EA	BRASS			
32	32-20069	Y-strainer 1/4F-F - 1/4F	1	EA	BRASS			
33	22-20083	Nipple M16P1.5 - PF1/4M, brass	3	EA	BRASS			
34	70839	Ring nipple PT1/4M - M8, brass	3	EA	BRASS			
36	32-23051	Drain valve, 1/4, R251X	1	EA				
37	70850	Hose fitting PT1/4M - 9.5 elbow, brass	1	EA	BRASS			
39	14-40016	Truss Head Screw M4x10, STS304	2	EA				
40	82-29420	Water Line sus pipe assy D.10, L.233 XD/E 2V.	1	EA				
41	82-22033	Water Line sus pipe assy D.10 L.182, XE 2V.	1	EA				
42	82-29309	Copper pipe D.4 L.238, humidification, XD/E	1	EA				
43	82-29310	Copper pipe D.4 L.148, humidification, XD/E	1	EA				
44	14-43018	Gasket D.27 x 14 x 2.5t, NBR	(1)	EA				
45	71365	Swivel nipple PF3/4F - PF1/2M, USA	(1)	EA				
46	70856	Socket PF1/2F, L.20	(1)	EA				
47	14-40041	Flange bolt M5 X 10	1	EA				
48	11-12004	Grommet D.35	(1)	EA				
49	14-42003	Cable saddle 16	(1)	EA				
A	82-20080	Water inlet nipple assy 3V.	1	SET				
B	82-23032	Steam outlet valve assy, PF3/8 2V.	2	SET				
C	82-23043	Water pump assy 3V.	1	SET		2021.02		
D	82-20106	Y-strainer + non-return valve assy, XD/E, 2V	1	SET		2021.02		
F	82-23048	Water drain valve assy, XD/E 2V.	1	SET				
G	82-23044	Moisture valve assy, XD/E	1	SET				
H	A71619	Garden hose adapter PF3/4 "	1	SET				

TABLE NO. 003

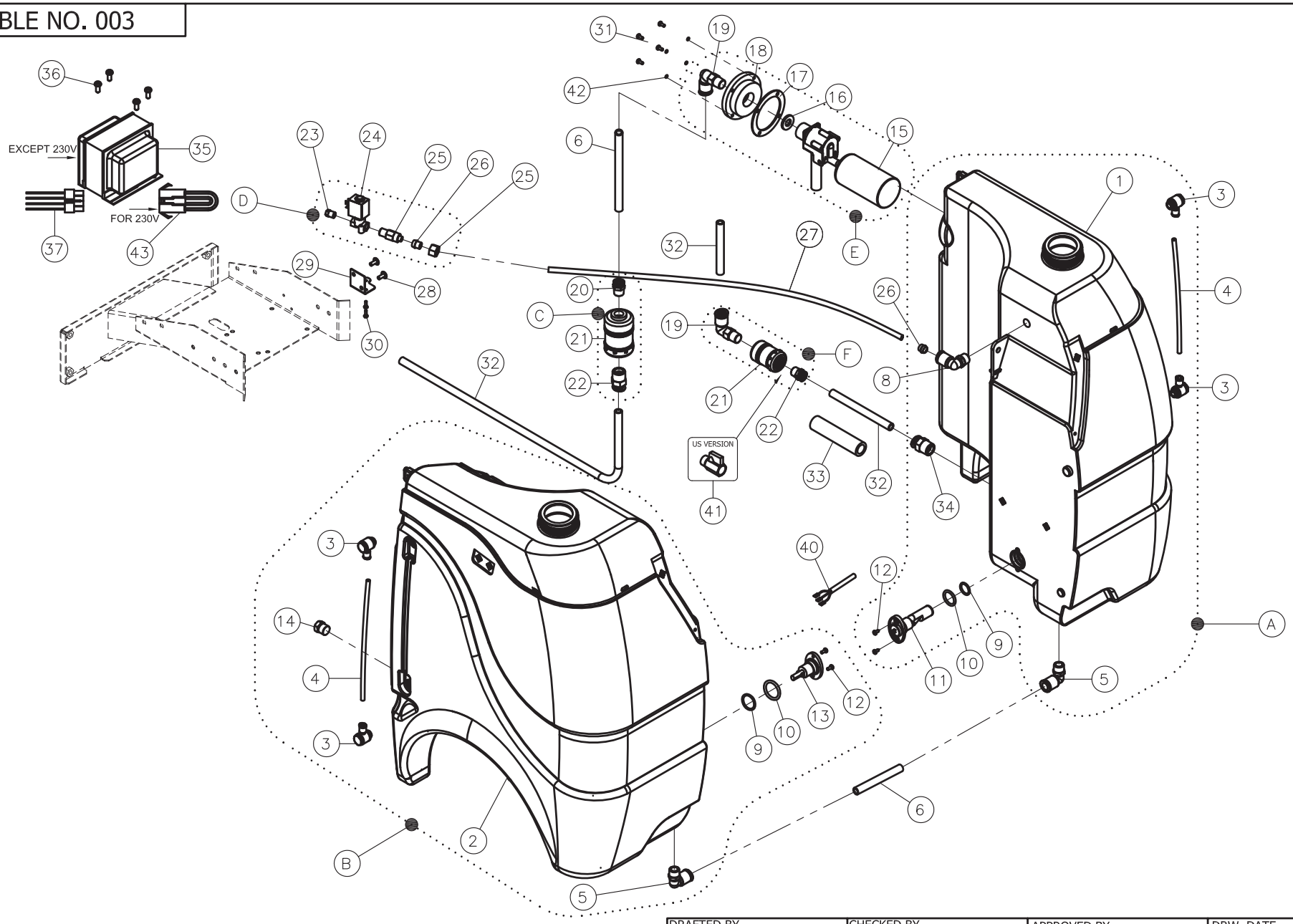

DRAFTED BY	CHECKED BY	APPROVED BY	DRW. DATE
JD.LEE	YM.LEE	TW.KWON	2021.02.01

SJE Corporation, Ltd.
Global Leader of Green solutions

TITLE			
TANK ASSEMBLY			
MODEL	SCALE	SIZE	
OPTIMA XE	1: 6	A4	

TABLE NO. 003 : TANK ASSEMBLY

REF NO.	PART NO.	DESCRIPTION	Q'TY	UNIT	MATERIAL	FROM	TO	REPLACED NO.
1	20-05013	Water tank XD/E, D.60 2V.	1	EA				
2	20-05012	Tank, optima XD/E 2V.	1	EA				
3	12-21008	One touch fitting SJE08G02(M)	4	EA				
4	12-22035	Nylon tube D.8 x 6 x 1000mm	0.5	M				
5	12-21005	One touch fitting SJE16G03	2	EA				
6	70650	Water feeding U-Tube, D.16x11	0.05	M				
8	12-20066	Two touch elbow 8 x 6, PT1/4M	1	EA				
9	70917	O-ring D.17.12 x 2.62 U115	2	EA				
10	70911	O-ring D.21.89x2.62 U118	2	EA				
11	23-33022	Float level switch, white, 2V.	1	EA		2020.07		
12	14-40015	Screw TCB-TC 3.5x12	4	EA				
13	21-19001	Tank hole Plug 2V.	1	EA				
14	70598	Plug G1/4, brass	1	EA				
15	32-23014	Floater 3/4, DN20BX	1	EA				
16	70362	Gasket D.12x25x3 NBR	1	EA				
17	14-43006	Gasket D.82 x 60.2 x 3t NBR	1	EA				
18	71251	Float adapter D.80-60, G3/4-PT3/8	1	EA				
19	71254	One touch fitting PL1203 (3/8)	2	EA				
20	71261	One touch fitting PC1203 (3/8)	1	EA				
21	71370	Water filter 3/8 - 1/2, mesh	2	EA				
22	71256	One touch fitting PC1204 (1/2)	2	EA				
23	70868	Joint body, PD4	1	EA				
24	71231	Electronic valve JYZ-3E 230V, air purge	1	EA				
25	71360	Two touch fitting C4N8X6-PT1/8	1	EA				
26	71361	Sleeve D.8 for tube fitting	2	EA				
27	70640	Teflon tube D.8 x 6	1	EA				
28	70416	Truss head screw M5 x 12	2	EA				
29	70487	Air valve bracket, sus	1	EA				
30	70411	Truss head bolt M4 x 10	2	EA				
31	70500	Screw T/T M4.8 x 20	4	EA				
32	71257	Water feeding U-Tube, D.12x8	0.5	M				
33	70634	Silicon tube 15 x 19, black	0.25	M				
34	12-21012	One touch fitting PC12G04	1	EA				
35	23-32025	Transformer 200-230V 50/60Hz 250VA, Connector	1	EA				
35	23-32014	Transformer 208-230V 50/60Hz 250VA Double	(1)	EA				
35	71175	Transformer 400-230V 50/60Hz 250VA, Connector	(1)	EA				
35	23-32024	Transformer 415-230V 50/60Hz 250VA, Connector	(1)	EA				
35	71176	Transformer 440-230V 50/60Hz 250VA, Connector	(1)	EA				
35	23-32011	Transformer 460-230V 50/60Hz 250VA Double	(1)	EA				
35	23-32010	Transformer 480-230V 50/60Hz 250VA Double	(1)	EA				
35	23-32022	Transformer 600-230V 50/60Hz 250VA, Double	(1)	EA				
36	70416	Truss head screw M5 x 12	4	EA				
37	70988	Cables with connector, transformer	1	EA				
40	70157	Cables for floater level switch	1	EA				
41	32-23056	Valve, PT1/2MF, MBVMF-04	(1)	EA				
42	14-43025	O-ring P5 D.4.8x 1.9, NBR	4	EA				
43	23-31020	Short connector, transformer	1	EA		2021.03		
A	80-05105	Water tank(L) assy, XE	1	SET				
B	80-05104	Water tank(R) assy, XE	1	SET				
C	82-24005	Water filter assy, mesh	1	SET				
D	A71711	Air purge valve assy 220/230V 2V.	1	SET				
E	82-23041	Water Float assy, XD/E	1	SET				
F	A71659	Water filter assy (mesh)	1	SET		2021.02		

TABLE NO. 004

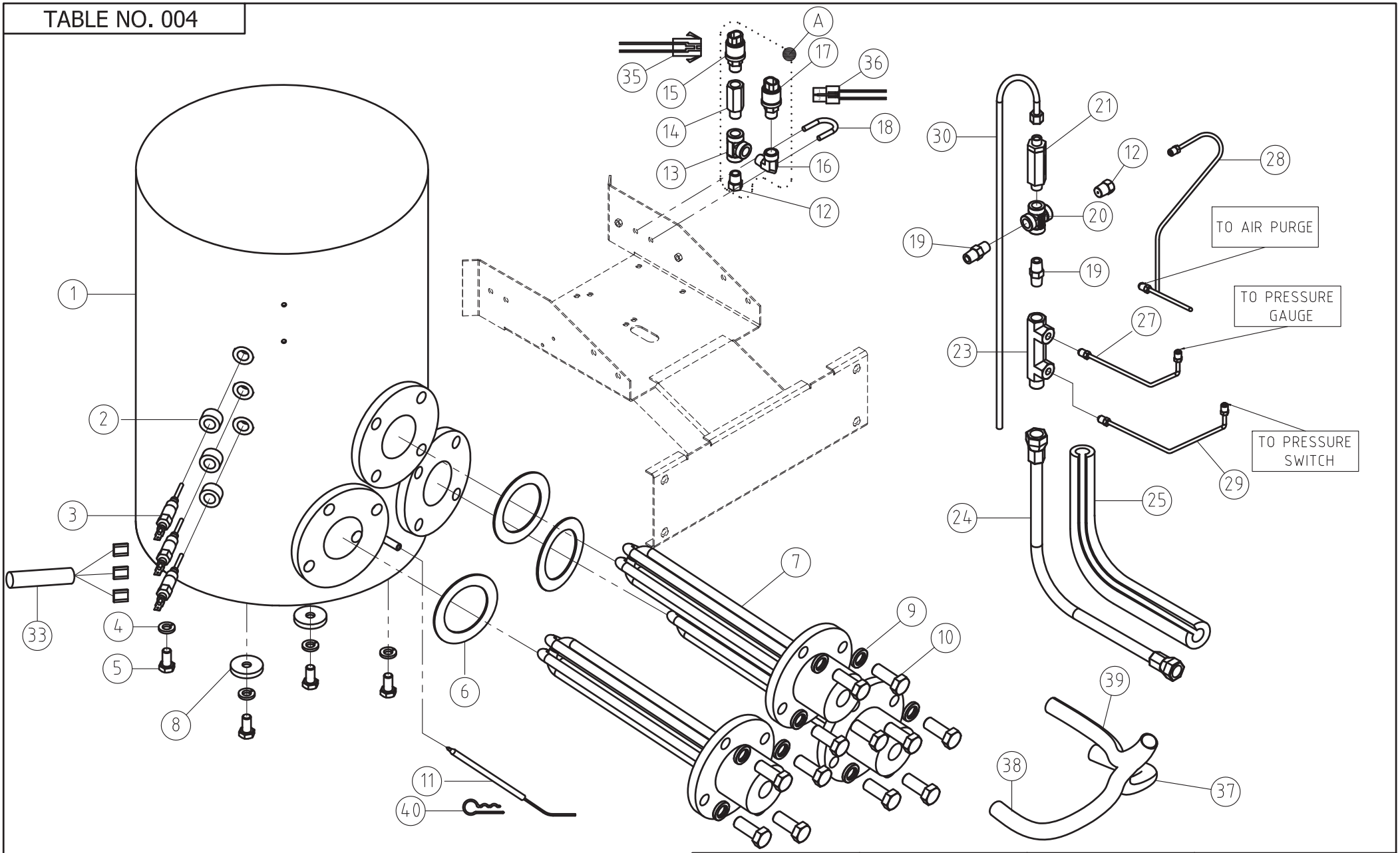

DRAFTED BY	CHECKED BY	APPROVED BY	DRW. DATE
JD.LEE	YM.LEE	TW.KWON	2021.02.01

SJE Corporation, Ltd.
Global Leader of Green solutions

TITLE			
STEAM GENERATOR 27K			
MODEL	SCALE	SIZE	
OPTIMA XE	1: 4	A4	

TABLE NO. 004 : STEAM GENERATOR (27K)

REF NO.	PART NO.	DESCRIPTION	Q'TY	UNIT	MATERIAL	FROM	TO	REPLACED NO.
1	21-10021	Electric steam vessel, 27K 19.5L 2V. SE	1	EA	STS			
2	70635	Foam Silicon tube 12 x 24, brown	0.09	M	SILICON			
3	70175	Water probe sensor	3	EA				
4	70377	Spring washer M10	4	EA				
5	70423	Hex. bolt M10 x 20	4	EA				
6	70355	Packing D.90 x 62, Teflon	3	EA	PTFE			
7	70460	Electric heater 9KW, 3ph 230/400V	3	EA				
7	70469	Electric heater 9KW, 3ph 415V	(3)	EA				
7	70471	Electric heater 9KW, 3ph 440V	(3)	EA				
7	70470	Electric heater 9KW, 3ph 460V	(3)	EA				
7	70478	Electric heater 9KW, 3ph 480V	(3)	EA				
7	23-34012	Electric heater 9KW, 3ph 600V	(3)	EA				
8	14-41015	Plain washer M10X40X3t , sus	2	EA	STS			
9	70383	Spring washer M14	12	EA				
10	70424	Hex. bolt M14 x 35	12	EA				
11	23-33019	Thermistor temp sensor L.1000mm 2V.	1	EA		2020.01		
12	70839	Ring nipple PT1/4M - M8, brass	2	EA	BRASS			
13	70785	Tee-nipple PT1/4F, brass	1	EA	BRASS			
14	71268	Nipple PT1/4 M-F L.45, brass	1	EA	BRASS			
15	70082	Pressure switch, Auto reset, N/C, 9.5/8 bar	1	EA				
16	70803	Elbow nipple PT1/4MF, brass	1	EA	BRASS			
17	70081	Pressure switch, Auto reset, N/C, 8.5/7 bar	1	EA				
18	71352	U-bolt 1/4 x 10A, sus	1	EA	STS			
19	70821	Nipple PT1/4M, sus	2	EA	STS			
20	71269	Cross nipple PT1/4F, sus	1	EA	STS	2021.02		
21	22-23059	Safety valve 9.5bar 1/4M-M16 3V.	1	EA	BRASS	2020.07		
23	22-20103	Manifold, PT1/4 - PF3/8, brass	1	EA	BRASS	2021.02		
24	71287	Flexible Steam pipe L.580	1	EA				
25	70636	Foam Silicon tube 22 x 32, brown	0.5	M	SILICON			
27	82-29618	Copper pipe D.4 L.498, Pressure gauge, XE, 3h, 2V	1	SET		2021.02		
28	82-29514	Copper pipe D.4 L.704, Air valve, XE/EST, 3h, 4V	1	SET		2021.02		
29	82-29731	Copper Pipe D.4 L.258, Pressure switch, XE/EST, 3h, 4V	1	SET		2021.02		
30	82-29418	Drain Out D.10 sus, L.685 XE-3h	1	EA	STS			
33	70981	Cables for water probe sensor, EST	1	EA				
35	70983	Cables with connector, pressure switch P1	1	EA				
36	70984	Cables with connector, pressure switch P2	1	EA				
37	70312	Teflon Cable 3.5㎟, Blue	1.5	M				
38	70313	Teflon Cable 3.5㎟, Red	1.5	M				
39	70314	Teflon Cable 3.5㎟, white	1.5	M				
40	70857	Snap pin (R) SSP-12	1	EA				
A	A71683	Pressure switch line assy	1	SET				

TABLE NO. 005

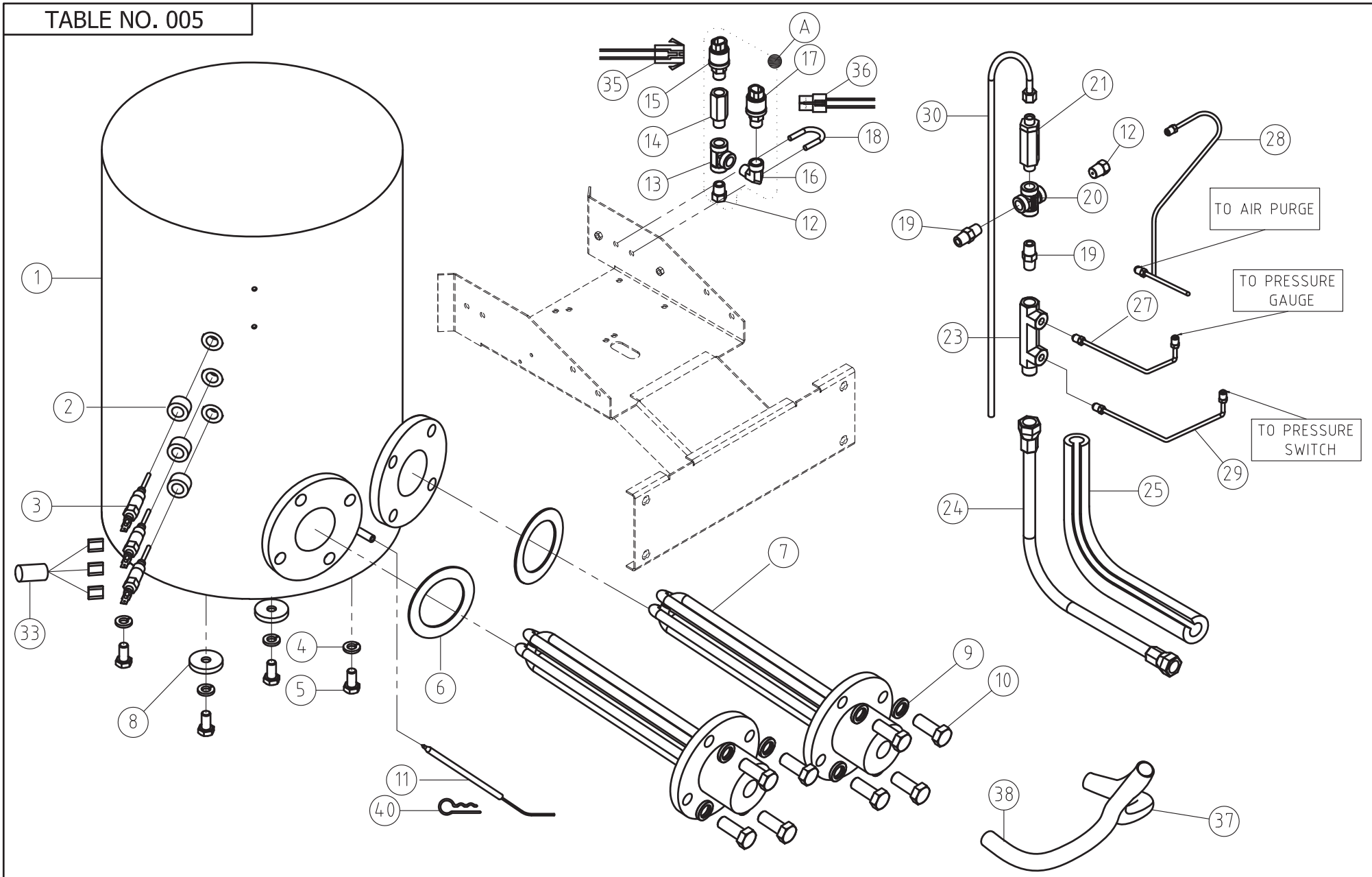

DRAFTED BY	CHECKED BY	APPROVED BY	DRW. DATE
JD.LEE	YM.LEE	TW.KWON	2021.02.01

SJE Corporation, Ltd.
Global Leader of Green solutions

TITLE			
STEAM GENERATOR (18K)			
MODEL	SCALE	SIZE	
OPTIMA XE	1: 4	A4	

TABLE NO. 005 : STEAM GENERATOR (18K)

REF NO.	PART NO.	DESCRIPTION	Q'TY	UNIT	MATERIAL	FROM	TO	REPLACED NO.
1	21-10022	Electric steam vessel, 18K 14.5L 2V. SE	1	EA	STS			
2	70635	Foam Silicon tube 12 x 24, brown	0.075	M	SILICON			
3	70175	Water probe sensor	3	EA				
4	70377	Spring washer M10	4	EA				
5	70423	Hex. bolt M10 x 20	4	EA				
6	70355	Packing D.90 x 62, Teflon	2	EA	PTFE			
7	70460	Electric heater 9KW, 3ph 230/400V	2	EA				
7	70462	Electric heater 9KW, 3ph 208V	(2)	EA				
7	70469	Electric heater 9KW, 3ph 415V	(2)	EA				
7	70471	Electric heater 9KW, 3ph 440V	(2)	EA				
7	70470	Electric heater 9KW, 3ph 460V	(2)	EA				
7	70478	Electric heater 9KW, 3ph 480V	(2)	EA				
7	23-34012	Electric heater 9KW, 3ph 600V	(2)	EA				
8	14-41015	Plain washer M10X40X3t , sus	2	EA				
9	70383	Spring washer M14	8	EA				
10	70424	Hex. bolt M14 x 35	8	EA				
11	23-33019	Thermistor temp sensor L.1000mm 2V.	1	EA		2020.01		
12	70839	Ring nipple PT1/4M - M8, brass	2	EA	BRASS			
13	70785	Tee-nipple PT1/4F, brass	1	EA	BRASS			
14	71268	Nipple PT1/4 M-F L.45, brass	1	EA	BRASS			
15	70082	Pressure switch, Auto reset, N/C, 9.5/8 bar	1	EA				
16	70803	Elbow nipple PT1/4MF, brass	1	EA	BRASS			
17	70081	Pressure switch, Auto reset, N/C, 8.5/7 bar	1	EA				
18	71352	U-bolt 1/4 x 10A, sus	1	EA	STS			
19	70821	Nipple PT1/4M, sus	2	EA	STS			
20	71269	Cross nipple PT1/4F, sus	1	EA	STS	2021.02		
21	22-23059	Safety valve 9.5bar 1/4M-M16 3V.	1	EA	BRASS	2020.07		
23	22-20103	Manifold, PT1/4 - PF3/8, brass	1	EA	BRASS	2021.02		
24	22-22051	Flexible Steam pipe L.500	1	EA		2021.02		
25	70636	Foam Silicon tube 22 x 32, brown	0.5	M	SILICON			
27	82-29619	Copper pipe D.4 L.586, Pressure gauge, XE, 2h, 2V	1	SET		2021.02		
28	82-29515	Copper pipe D.4 L.576, Air valve, XE/EST, 2h, 4V	1	SET		2021.02		
29	82-29732	Copper Pipe D.4 L.342, Pressure switch, XE/EST, 2h, 4V	1	SET		2021.02		
30	82-29419	Drain Out D.10 sus, L.600 XE-2h	1	EA	SUS			
33	70981	Cables for water probe sensor, EST	1	EA				
35	70983	Cables with connector, pressure switch P1	1	EA				
36	70984	Cables with connector, pressure switch P2	1	EA				
37	70312	Teflon Cable 3.5㎟, Blue	1.5	M				
38	70313	Teflon Cable 3.5㎟, Red	1.5	M				
40	70857	Snap pin (R) SSP-12	1	EA				
A	A71683	Pressure switch line assy	1	SET				

TABLE NO.006

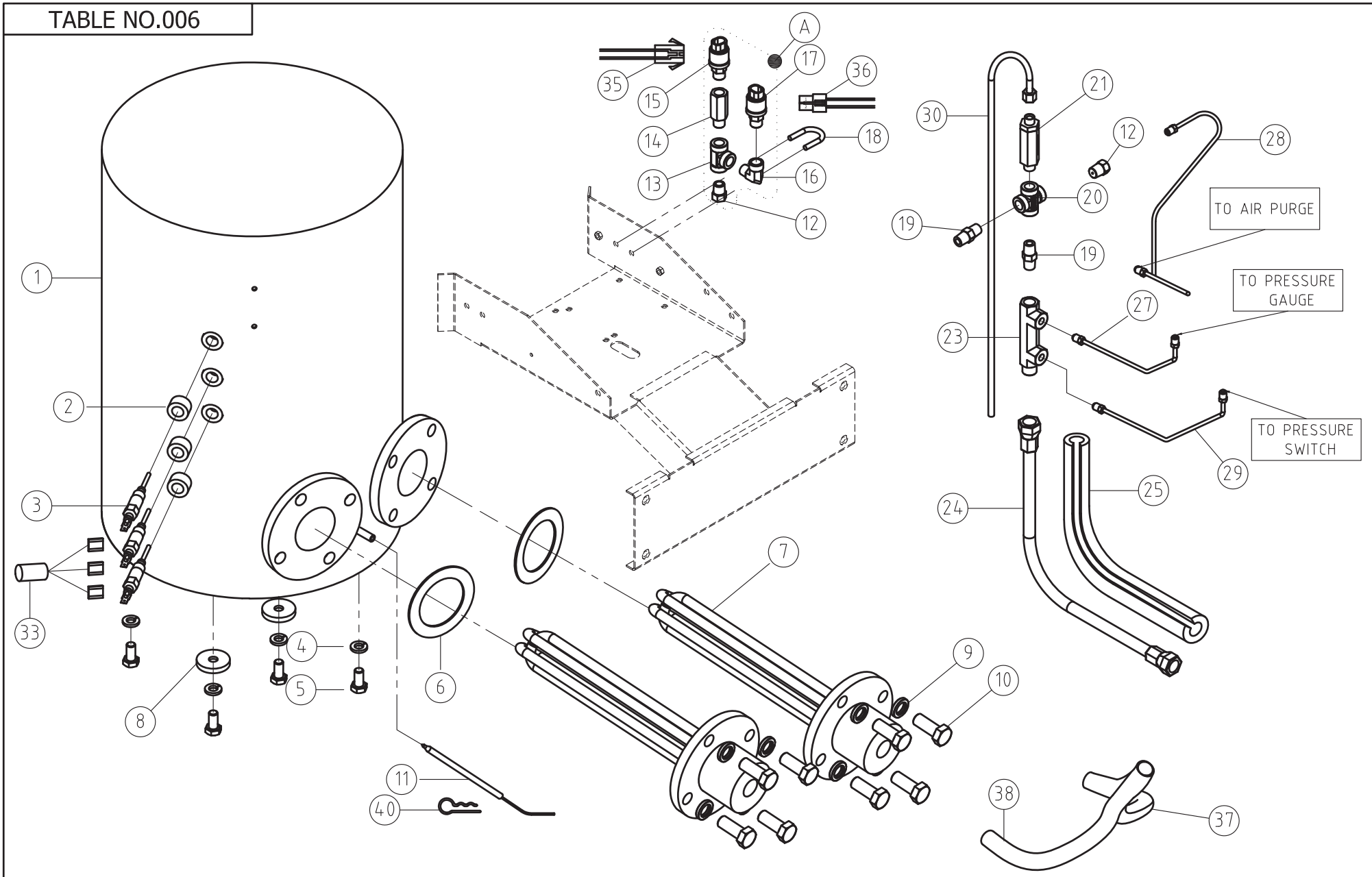

DRAFTED BY	CHECKED BY	APPROVED BY	DRW. DATE
JD.LEE	YM.LEE	TW.KWON	2021.02.01

SJE Corporation, Ltd.
Global Leader of Green solutions

TITLE			
STEAM GENERATOR (12K)			
MODEL	SCALE	SIZE	
OPTIMA XE	1: 4	A4	

TABLE NO. 006 : STEAM GENERATOR (12K)

REF NO.	PART NO.	DESCRIPTION	Q'TY	UNIT	MATERIAL	FROM	TO	REPLACED NO.
1	21-10022	Electric steam vessel, 18K 14.5L 2V. SE	1	EA	STS			
2	70635	Foam Silicon tube 12 x 24, brown	0.075	M	SILICON			
3	70175	Water probe sensor	3	EA				
4	70377	Spring washer M10	4	EA				
5	70423	Hex. bolt M10 x 20	4	EA				
6	70355	Packing D.90 x 62, Teflon	2	EA	PTFE			
7	70459	Electric heater 6KW, 3ph 230/400V	2	EA				
7	70461	Electric heater 6KW, 3ph 208V	(2)	EA				
7	70464	Electric heater 6KW, 3ph 415V	(2)	EA				
7	70475	Electric heater 6KW, 3ph 440V	(2)	EA				
7	70468	Electric heater 6KW, 3ph 460V	(2)	EA				
7	70479	Electric heater 6KW, 3ph 480V	(2)	EA				
7	23-34014	Electric heater 6KW, 3ph 600V	(2)	EA				
8	14-41015	Plain washer M10X40X3t , sus	2	EA	STS			
9	70383	Spring washer M14	8	EA				
10	70424	Hex. bolt M14 x 35	8	EA				
11	23-33019	Thermistor temp sensor L.1000mm 2V.	1	EA		2020.01		
12	70839	Ring nipple PT1/4M - M8, brass	2	EA	BRASS			
13	70785	Tee-nipple PT1/4F, brass	1	EA	BRASS			
14	71268	Nipple PT1/4 M-F L.45, brass	1	EA	BRASS			
15	70082	Pressure switch, Auto reset, N/C, 9.5/8 bar	1	EA				
16	70803	Elbow nipple PT1/4MF, brass	1	EA	BRASS			
17	70081	Pressure switch, Auto reset, N/C, 8.5/7 bar	1	EA				
18	71352	U-bolt 1/4 x 10A, sus	1	EA	STS			
19	70821	Nipple PT1/4M, sus	2	EA	STS			
20	71269	Cross nipple PT1/4F, sus	1	EA	STS	2021.02		
21	22-23059	Safety valve 9.5bar 1/4M-M16 3V.	1	EA	BRASS	2020.07		
23	22-20103	Manifold, PT1/4 - PF3/8, brass	1	EA	BRASS	2021.02		
24	22-22051	Flexible Steam pipe L.500	1	EA		2021.02		
25	70636	Foam Silicon tube 22 x 32, brown	0.5	M	SILICON			
27	82-29619	Copper pipe D.4 L.586, Pressure gauge, XE, 2h, 2V	1	SET		2021.02		
28	82-29515	Copper pipe D.4 L.576, Air valve, XE/EST, 2h, 4V	1	SET		2021.02		
29	82-29732	Copper Pipe D.4 L.342, Pressure switch, XE/EST, 2h, 4V	1	SET		2021.02		
30	82-29419	Drain Out D.10 sus, L.600 XE-2h	1	EA	STS			
33	70981	Cables for water probe sensor, EST	1	EA				
35	70983	Cables with connector, pressure switch P1	1	EA				
36	70984	Cables with connector, pressure switch P2	1	EA				
37	70312	Teflon Cable 3.5㎟, Blue	1.5	M				
38	70313	Teflon Cable 3.5㎟, Red	1.5	M				
40	70857	Snap pin (R) SSP-12	1	EA				
A	A71683	Pressure switch line assy	1	SET				

TABLE NO.007

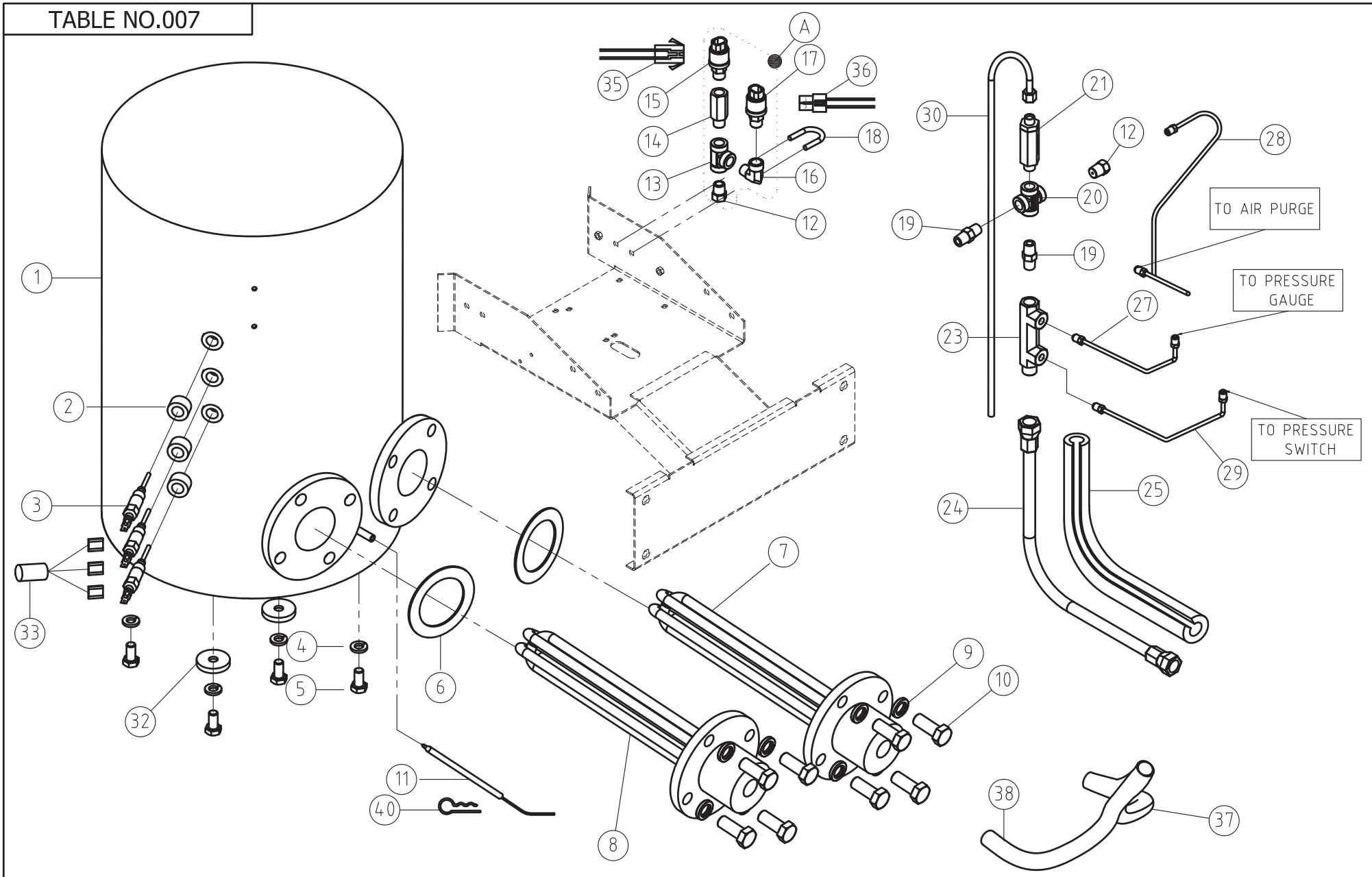

DRAFTED BY	CHECKED BY	APPROVED BY	DRW. DATE
JD.LEE	YM.LEE	TW.KWON	2021.02.01

SJE Corporation, Ltd.
Global Leader of Green solutions

TITLE			
STEAM GENERATOR (05K)			
MODEL	SCALE	SIZE	
OPTIMA XE	1: 4	A4	

TABLE NO. 007: STEAM GENERATOR (05K)

REF NO.	PART NO.	DESCRIPTION	Q'TY	UNIT	MATERIAL	FROM	TO	REPLACED NO.
1	21-10022	Electric steam vessel, 18K 14.5L 2V. SE	1	EA	STS			
2	70635	Foam Silicon tube 12 x 24, brown	0.075	M	SILICON			
3	70175	Water probe sensor	3	EA				
4	70377	Spring washer M10	4	EA				
5	70423	Hex. bolt M10 x 20	4	EA				
6	70355	Packing D.90 x 62, Teflon	2	EA	PTFE			
7	70458	Electric heater 3KW, 230V	1	EA				
7	70477	Electric heater 3KW, 208V	(1)	EA				
8	70457	Electric heater 2KW, 230V	1	EA				
8	70476	Electric heater 2KW, 208V	(1)	EA				
9	70383	Spring washer M14	8	EA				
10	70424	Hex. bolt M14 x 35	8	EA				
11	23-33019	Thermistor temp sensor L.1000mm 2V.	1	EA		2020.01		
12	70839	Ring nipple PT1/4M - M8, brass	2	EA	BRASS			
13	70785	Tee-nipple PT1/4F, brass	1	EA	BRASS			
14	71268	Nipple PT1/4 M-F L.45, brass	1	EA	BRASS			
15	70082	Pressure switch, Auto reset, N/C, 9.5/8 bar	1	EA				
16	70803	Elbow nipple PT1/4MF, brass	1	EA	BRASS			
17	70081	Pressure switch, Auto reset, N/C, 8.5/7 bar	1	EA				
18	71352	U-bolt 1/4 x 10A, sus	1	EA	STS			
19	70821	Nipple PT1/4M, sus	2	EA	STS			
20	71269	Cross nipple PT1/4F, sus	1	EA	STS	2021.02		
21	22-23059	Safety valve 9.5bar 1/4M-M16 3V.	1	EA	BRASS	2020.07		
23	22-20103	Manifold, PT1/4 - PF3/8, brass	1	EA	BRASS	2021.02		
24	22-22051	Flexible Steam pipe L.500	1	EA		2021.02		
25	70636	Foam Silicon tube 22 x 32, brown	0.5	M	SILICON			
27	82-29619	Copper pipe D.4 L.586, Pressure gauge, XE, 2h, 2V	1	SET		2021.02		
28	82-29515	Copper pipe D.4 L.576, Air valve, XE/EST, 2h, 4V	1	SET		2021.02		
29	82-29732	Copper Pipe D.4 L.342, Pressure switch, XE/EST, 2h, 4V	1	SET		2021.02		
30	82-29419	Drain Out D.10 sus, L.600 XE-2h	1	EA	SUS			
32	14-41015	Plain washer M10X40X3t , sus	2	EA	STS			
33	70981	Cables for water probe sensor, EST	1	EA				
35	70983	Cables with connector, pressure switch P1	1	EA				
36	70984	Cables with connector, pressure switch P2	1	EA				
37	70312	Teflon Cable 3.5㎟, Blue	1.5	M				
38	70313	Teflon Cable 3.5㎟, Red	1.5	M				
40	70857	Snap pin (R) SSP-12	1	EA				
A	A71683	Pressure switch line assy	1	SET				

TABLE NO. 008

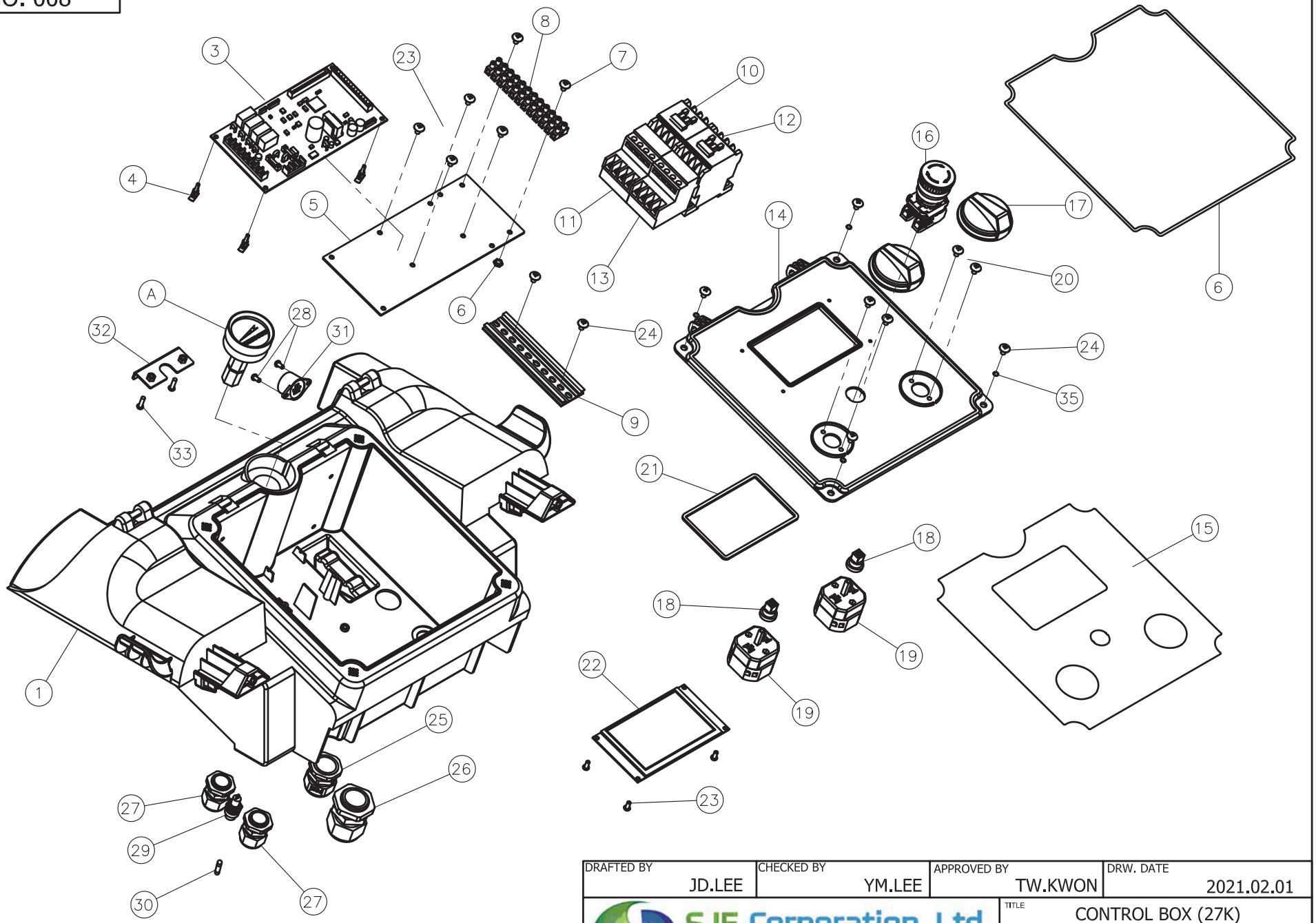

DRAFTED BY	CHECKED BY	APPROVED BY	DRW. DATE
JD.LEE	YM.LEE	TW.KWON	2021.02.01

SJE Corporation, Ltd.
Global Leader of Green solutions

TITLE			
CONTROL BOX (27K)			
MODEL	SCALE	SIZE	
OPTIMA XE	1: 4	A4	

TABLE NO. 008 : CONTROL BOX(27K)

REF NO.	PART NO.	DESCRIPTION	Q'TY	UNIT	MATERIAL	FROM	TO	REPLACED NO.
1	20-03021	Control box , XD/E	1	EA	PP			
3	23-32020	Electric control card AC 2.3 - GNT	1	EA				
4	70916	Saddle SS-13N	4	EA				
5	23-35045	Pcb mounting panel 231x120	1	EA				
6	14-43027	Seal D3.5, Slicone Foam 1m	1	M	SILICONE	2020.03		
7	70430	Set screw M4 x 8	2	EA				
8	70578	Terminal block, EKL1BEF-12P	1	EA				
9	70736	Snap bracket L.1000, WS-AR-1	0.08	M				
10	70733	Contactor MC-22B AC220V	1	EA				
11	70735	Thermal Relay MT-32 (12-18A)	1	EA				
11	13-32004	Thermal Relay MT-32 (9-13A)	(1)	EA				
12	13-32002	Contactor MC 40A	1	EA				
13	70734	Thermal Relay MT-32 (22-32A)	1	EA				
13	13-32005	Thermal Relay MT-32 (16-22A)	(1)	EA				
14	20-03031	Control panel, XD/E	1	EA	PP			
15	28-80021	Control panel sticker, XD/E	1	EA				
16	13-33008	Emergency Stop Switch, DECA A20B-V4E02R	1	EA				
17	20-03039	Control knob, 2V	2	EA	ABS			
18	20-03040	Control knob holder, 2V	2	EA	POM			
19	71168	Rotary Switch 16A, SA16 2-1	2	EA				
20	71434	Round head screw M4 x 20	4	EA				
21	24-43013	Pad 3T*8*1000, EPDM	0.4	M	EPDM			
22	23-32021	Display control card V1.1 with cable	1	EA				
23	14-40033	Pan head tapping screw, M4 X 8, II	8	EA				
24	70500	Screw T/T M4.8 x 20	6	EA				
25	70325	Cable gland PG21	1	EA				
26	70320	Cable gland PG25	1	EA				
27	70326	Cable gland PG16	2	EA				
28	14-40049	Pan head tapping screw, M3 X 8, II	2	EA				
29	33-33020	Fuse holder, R3-57	1	EA		2020.02		
30	13-33021	Fuse 5X20 4A, CERM	1	EA		2020.02		
31	70769	Buzzer DC12V	1	EA				
32	21-13008	Pressure gauge bracket, XD/E	1	EA	STS			
33	14-40034	Hex. Socket Bolt M5 X 35	2	EA				
35	14-41009	Washer M5, SUS	4	EA				
A	82-24008	Pressure gauge 0-15bar D.50 PD4, 2V.	1	SET				
-	83-35025	Control Box assy XE(27K, 380~480V)	1	SET				
-	83-35024	Control Box assy XE(27K, 600V)	(1)	SET				

TABLE NO. 009

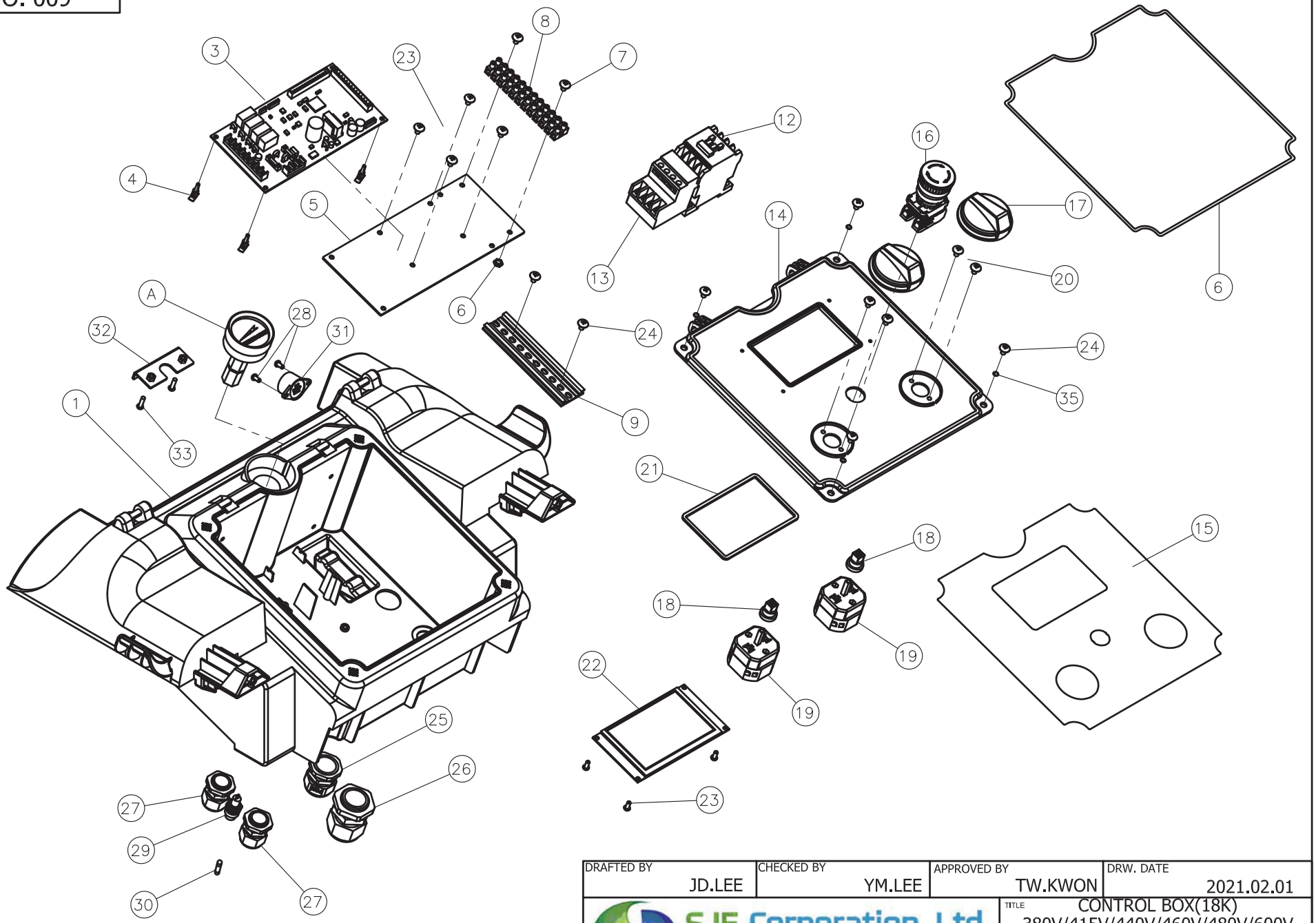

DRAFTED BY	CHECKED BY	APPROVED BY	DRW. DATE
JD.LEE	YM.LEE	TW.KWON	2021.02.01

SJE Corporation, Ltd.
Global Leader of Green solutions

TITLE: CONTROL BOX(18K)
380V/415V/440V/460V/480V/600V

MODEL	SCALE	SIZE
OPTIMA XE	1: 4	A4

TABLE NO. 009 : CONTROL BOX(18K, 380V/415V/440V/460V/480V/600V)

REF NO.	PART NO.	DESCRIPTION	Q'TY	UNIT	MATERIAL	FROM	TO	REPLACED NO.
1	20-03021	Control box , XD/E	1	EA	PP			
3	23-32020	Electric control card AC 2.3 - GNT	1	EA				
4	70916	Saddle SS-13N	4	EA				
5	23-35045	Pcb mounting panel 231x120	1	EA				
6	14-43027	Seal D3.5, Slicone Foam 1m	1	M	SILICONE	2020.03		
7	70430	Set screw M4 x 8	2	EA				
8	70578	Terminal block, EKL1BEF-12P	1	EA				
9	70736	Snap bracket L.1000, WS-AR-1	1	EA				
12	13-32002	Contactor MC 40A	1	EA				
13	70734	Thermal Relay MT-32 (22-32A)	1	EA				
13	13-32005	Thermal Relay MT-32 (16-22A)	(1)	EA				
14	20-03031	Control panel, XD/E	1	EA	PP			
15	28-80021	Control panel sticker, XD/E	1	EA				
16	13-33008	Emergency Stop Switch, DECA A20B-V4E02R	1	EA				
17	20-03039	Control knob, 2V	2	EA	ABS			
18	20-03040	Control knob holder, 2V	2	EA	POM			
19	71168	Rotary Switch 16A, SA16 2-1	2	EA				
20	71434	Round head screw M4 x 20	4	EA				
21	24-43013	Pad 3T*8*1000, EPDM	0.4	M	EPDM			
22	23-32021	Display control card V1.1 with cable	1	EA				
23	14-40033	Pan head tapping screw, M4 X 8, II	8	EA				
24	70500	Screw T/T M4.8 x 20	6	EA				
25	70325	Cable gland PG21	1	EA				
26	70322	Cable gland PG29	1	EA				
27	70326	Cable gland PG16	2	EA				
28	14-40049	Pan head tapping screw, M3 X 8, II	2	EA				
29	33-33020	Fuse holder, R3-57	1	EA		2020.02		
30	13-33021	Fuse 5X20 4A, CERM	1	EA		2020.02		
31	70769	Buzzer DC12V	1	EA				
32	21-13008	Pressure gauge bracket, XD/E	1	EA	STS			
33	14-40034	Hex. Socket Bolt M5 X 35	2	EA				
35	14-41009	Washer M5, SUS	4	EA				
A	82-24008	Pressure gauge 0-15bar D.50 PD4, 2V.	1	SET				
-	83-35027	Control Box assy XE(18K, 380~480V)	1	SET				
-	83-35026	Control Box assy XE(18K, 600V)	(1)	SET				

TABLE NO. 010

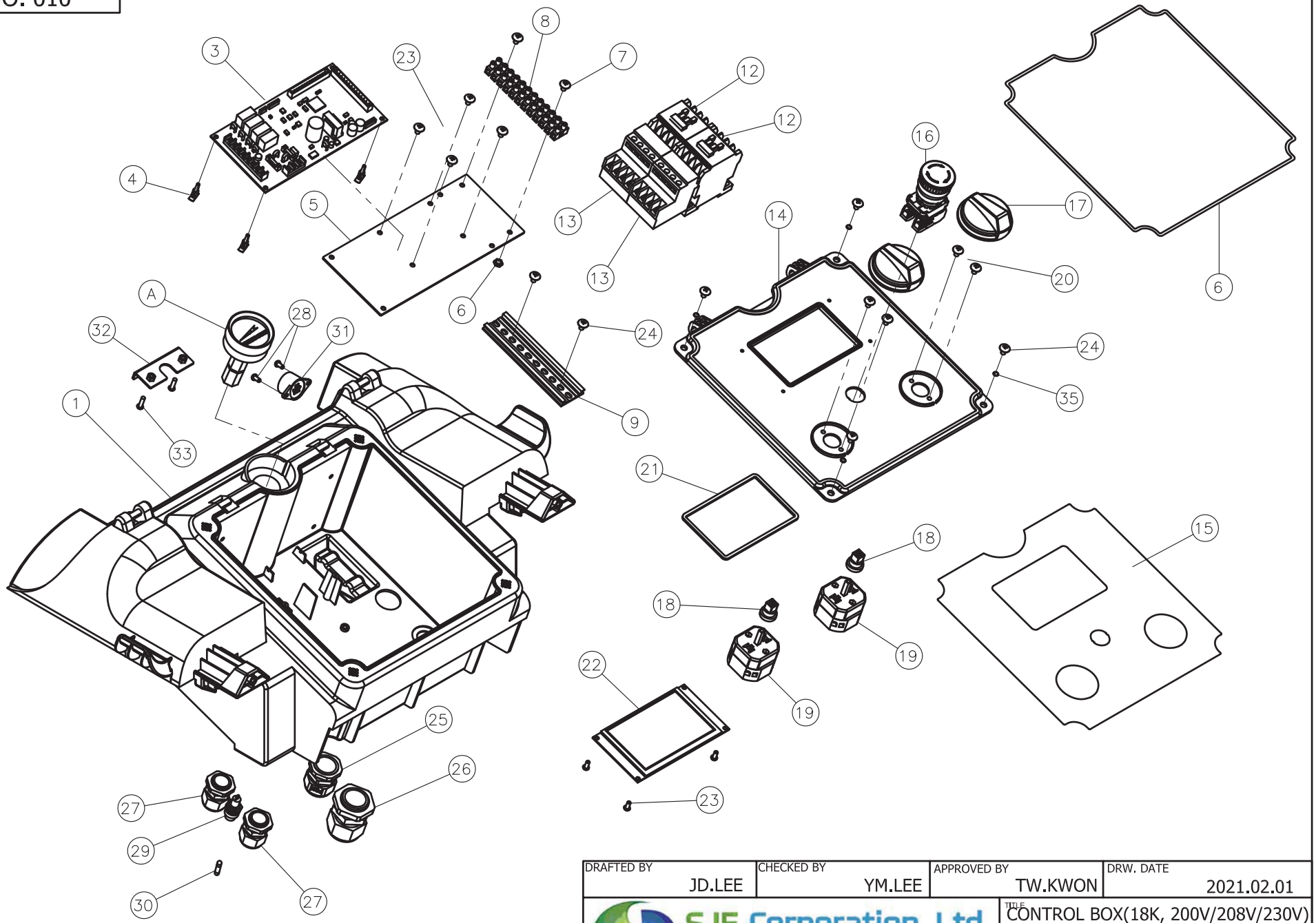

DRAFTED BY	CHECKED BY	APPROVED BY	DRW. DATE
JD.LEE	YM.LEE	TW.KWON	2021.02.01

SJE Corporation, Ltd.
Global Leader of Green solutions

TITLE: CONTROL BOX(18K, 200V/208V/230V)

MODEL	SCALE	SIZE
OPTIMA XE	1: 4	A4

TABLE NO. 010 : CONTROL BOX(18K, 200V/208V/230V)

REF NO.	PART NO.	DESCRIPTION	Q'TY	UNIT	MATERIAL	FROM	TO	REPLACED NO.
1	20-03021	Control box , XD/E	1	EA	PP			
3	23-32020	Electric control card AC 2.3 - GNT	1	EA				
4	70916	Saddle SS-13N	4	EA				
5	23-35045	Pcb mounting panel 231x120	1	EA				
6	14-43027	Seal D3.5, Slicone Foam 1m	1	M	SILICONE	2020.03		
7	70430	Set screw M4 x 8	2	EA				
8	70578	Terminal block, EKL1BEF-12P	1	EA				
9	70736	Snap bracket L.1000, WS-AR-1	1	EA				
12	13-32002	Contactor MC 40A	2	EA				
13	70734	Thermal Relay MT-32 (22-32A)	2	EA				
14	20-03031	Control panel, XD/E	1	EA	PP			
15	28-80021	Control panel sticker, XD/E	1	EA				
16	13-33008	Emergency Stop Switch, DECA A20B-V4E02R	1	EA				
17	20-03039	Control knob, 2V	2	EA	ABS			
18	20-03040	Control knob holder, 2V	2	EA	POM			
19	71168	Rotary Switch 16A, SA16 2-1	2	EA				
20	71434	Round head screw M4 x 20	4	EA				
21	24-43013	Pad 3T*8*1000, EPDM	0.4	M	EPDM			
22	23-32021	Display control card V1.1 with cable	1	EA				
23	14-40033	Pan head tapping screw, M4 X 8, II	8	EA				
24	70500	Screw T/T M4.8 x 20	6	EA				
25	70325	Cable gland PG21	1	EA				
26	70320	Cable gland PG25	1	EA				
27	70326	Cable gland PG16	2	EA				
28	14-40049	Pan head tapping screw, M3 X 8, II	2	EA				
29	33-33020	Fuse holder, R3-57	1	EA		2020.02		
30	13-33021	Fuse 5X20 4A, CERM	1	EA		2020.02		
31	70769	Buzzer DC12V	1	EA				
32	21-13008	Pressure gauge bracket, XD/E	1	EA	STS			
33	14-40034	Hex. Socket Bolt M5 X 35	2	EA				
35	14-41009	Washer M5, SUS	4	EA				
A	82-24008	Pressure gauge 0-15bar D.50 PD4, 2V.	1	SET				
-	83-35028	Control Box assy XE(18K, 200~230V)	1	SET				

TABLE NO. 011

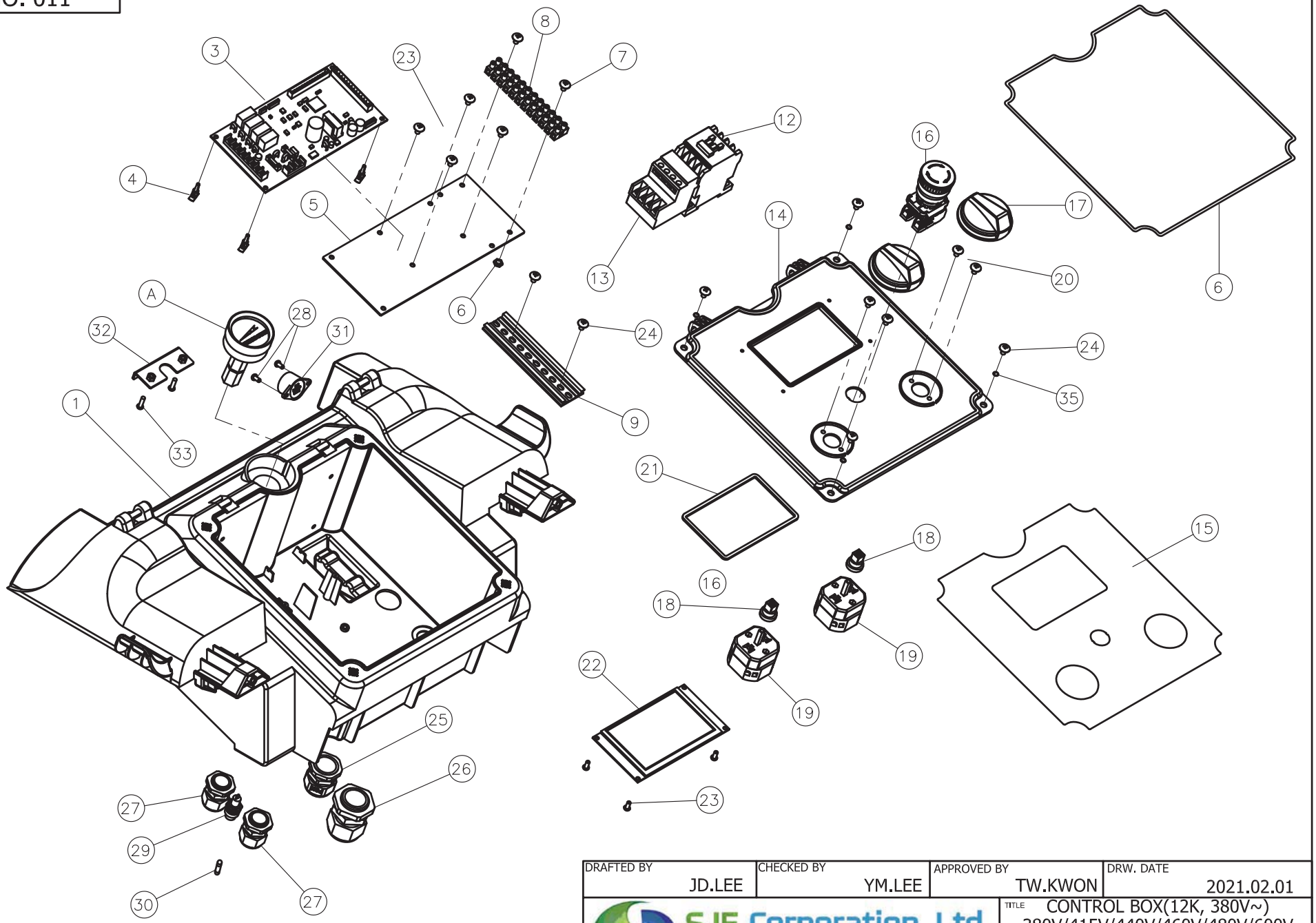

DRAFTED BY	CHECKED BY	APPROVED BY	DRW. DATE
JD.LEE	YM.LEE	TW.KWON	2021.02.01

SJE Corporation, Ltd.
Global Leader of Green solutions

TITLE: CONTROL BOX(12K, 380V~)
380V/415V/440V/460V/480V/600V

MODEL	SCALE	SIZE
OPTIMA XE	1: 4	A4

TABLE NO. 011 : CONTROL BOX(12K, 380V/415V/440V/460V/480V/600V)

REF NO.	PART NO.	DESCRIPTION	Q'TY	UNIT	MATERIAL	FROM	TO	REPLACED NO.
1	20-03021	Control box , XD/E	1	EA	PP			
3	23-32020	Electric control card AC 2.3 - GNT	1	EA				
4	70916	Saddle SS-13N	4	EA				
5	23-35045	Pcb mounting panel 231x120	1	EA				
6	14-43027	Seal D3.5, Slicone Foam 1m	1	M	SILICONE	2020.03		
7	70430	Set screw M4 x 8	2	EA				
8	70578	Terminal block, EKL1BEF-12P	1	EA				
9	70736	Snap bracket L.1000, WS-AR-1	1	EA				
12	13-32003	Contactor MC 32A	1	EA				
13	13-32005	Thermal Relay MT-32 (16-22A)	1	EA				
13	70735	Thermal Relay MT-32 (12-18A)	(1)	EA				
14	20-03031	Control panel, XD/E	1	EA	PP			
15	28-80021	Control panel sticker, XD/E	1	EA				
16	13-33008	Emergency Stop Switch, DECA A20B-V4E02R	1	EA				
17	20-03039	Control knob, 2V	2	EA	ABS			
18	20-03040	Control knob holder, 2V	2	EA	POM			
19	71168	Rotary Switch 16A, SA16 2-1	2	EA				
20	71434	Round head screw M4 x 20	4	EA				
21	24-43013	Pad 3T*8*1000, EPDM	0.4	M	EPDM			
22	23-32021	Display control card V1.1 with cable	1	EA				
23	14-40033	Pan head tapping screw, M4 X 8, II	8	EA				
24	70500	Screw T/T M4.8 x 20	6	EA				
25	70325	Cable gland PG21	1	EA				
26	70320	Cable gland PG25	1	EA				
27	70326	Cable gland PG16	2	EA				
28	14-40049	Pan head tapping screw, M3 X 8, II	2	EA				
29	33-33020	Fuse holder, R3-57	1	EA		2020.02		
30	13-33021	Fuse 5X20 4A, CERM	1	EA		2020.02		
31	70769	Buzzer DC12V	1	EA				
32	21-13008	Pressure gauge bracket, XD/E	1	EA	STS			
33	14-40034	Hex. Socket Bolt M5 X 35	2	EA				
35	14-41009	Washer M5, SUS	4	EA				
A	82-24008	Pressure gauge 0-15bar D.50 PD4, 2V.	1	SET				
-	83-35030	Control Box assy XE(12K, 380~480V)	1	SET				
-	83-35029	Control Box assy XE(12K, 600V)	(1)	SET				

TABLE NO. 012

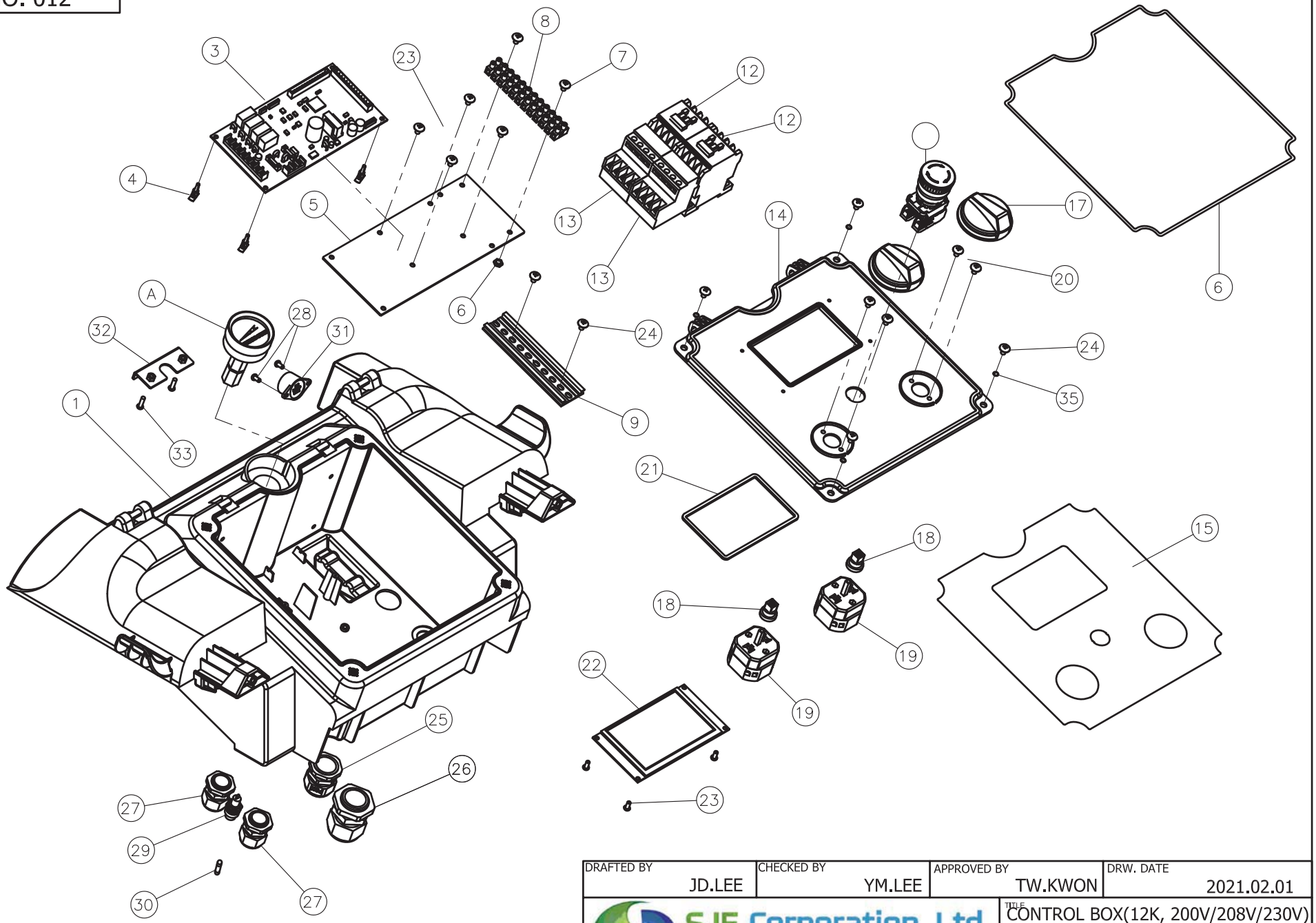

DRAFTED BY	CHECKED BY	APPROVED BY	DRW. DATE
JD.LEE	YM.LEE	TW.KWON	2021.02.01

SJE Corporation, Ltd.
Global Leader of Green solutions

TITLE: CONTROL BOX(12K, 200V/208V/230V)

MODEL	SCALE	SIZE
OPTIMA XE	1: 4	A4

TABLE NO. 012 : CONTROL BOX(12K, 200V/208V/230V)

REF NO.	PART NO.	DESCRIPTION	Q'TY	UNIT	MATERIAL	FROM	TO	REPLACED NO.
1	20-03021	Control box , XD/E	1	EA	PP			
3	23-32020	Electric control card AC 2.3 - GNT	1	EA				
4	70916	Saddle SS-13N	4	EA				
5	23-35045	Pcb mounting panel 231x120	1	EA				
6	14-43027	Seal D3.5, Slicone Foam 1m	1	M	SILICONE	2020.03		
7	70430	Set screw M4 x 8	2	EA				
8	70578	Terminal block, EKL1BEF-12P	1	EA				
9	70736	Snap bracket L.1000, WS-AR-1	1	EA				
12	13-32003	Contactor MC 32A	2	EA				
13	13-32005	Thermal Relay MT-32 (16-22A)	2	EA				
14	20-03031	Control panel, XD/E	1	EA	PP			
15	28-80021	Control panel sticker, XD/E	1	EA				
16	13-33008	Emergency Stop Switch, DECA A20B-V4E02R	1	EA				
17	20-03039	Control knob, 2V	2	EA	ABS			
18	20-03040	Control knob holder, 2V	2	EA	POM			
19	71168	Rotary Switch 16A, SA16 2-1	2	EA				
20	71434	Round head screw M4 x 20	4	EA				
21	24-43013	Pad 3T*8*1000, EPDM	0.4	M	EPDM			
22	23-32021	Display control card V1.1 with cable	1	EA				
23	14-40033	Pan head tapping screw, M4 X 8, II	8	EA				
24	70500	Screw T/T M4.8 x 20	6	EA				
25	70325	Cable gland PG21	1	EA				
26	70320	Cable gland PG25	1	EA				
27	70326	Cable gland PG16	2	EA				
28	14-40049	Pan head tapping screw, M3 X 8, II	2	EA				
29	33-33020	Fuse holder, R3-57	1	EA		2020.02		
30	13-33021	Fuse 5X20 4A, CERM	1	EA		2020.02		
31	70769	Buzzer DC12V	1	EA				
32	21-13008	Pressure gauge bracket, XD/E	1	EA	STS			
33	14-40034	Hex. Socket Bolt M5 X 35	2	EA				
35	14-41009	Washer M5, SUS	4	EA				
A	82-24008	Pressure gauge 0-15bar D.50 PD4, 2V.	1	SET				
-	83-35031	Control Box assy XE(12K, 200~230V)	1	SET				

TABLE NO. 013

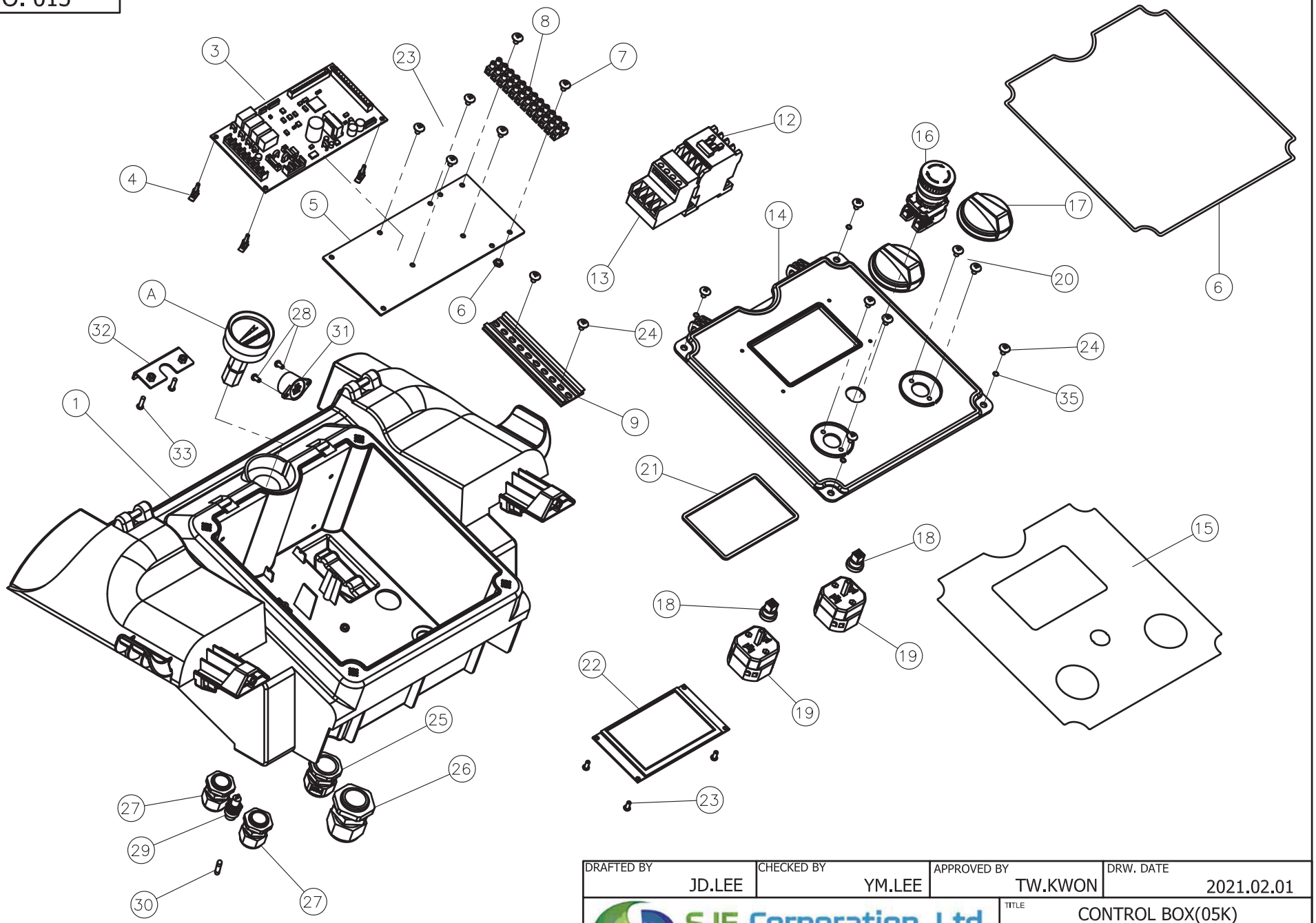

DRAFTED BY	CHECKED BY	APPROVED BY	DRW. DATE
JD.LEE	YM.LEE	TW.KWON	2021.02.01

SJE Corporation, Ltd.
Global Leader of Green solutions

TITLE			
CONTROL BOX(05K)			
MODEL	SCALE	SIZE	
OPTIMA XE	1: 4	A4	

TABLE NO. 013 : CONTROL BOX(05K)

REF NO.	PART NO.	DESCRIPTION	Q'TY	UNIT	MATERIAL	FROM	TO	REPLACED NO.
1	20-03021	Control box , XD/E	1	EA	PP			
3	23-32020	Electric control card AC 2.3 - GNT	1	EA				
4	70916	Saddle SS-13N	4	EA				
5	23-35045	Pcb mounting panel 231x120	1	EA				
6	14-43027	Seal D3.5, Slicone Foam 1m	1	M	SILICONE	2020.03		
7	70430	Set screw M4 x 8	2	EA				
8	70578	Terminal block, EKL1BEF-12P	1	EA				
9	70736	Snap bracket L.1000, WS-AR-1	1	EA				
12	13-32003	Contactor MC 32A	1	EA				
13	70734	Thermal Relay MT-32 (22-32A)	1	EA				
14	20-03031	Control panel, XD/E	1	EA	PP			
15	28-80021	Control panel sticker, XD/E	1	EA				
16	13-33008	Emergency Stop Switch, DECA A20B-V4E02R	1	EA				
17	20-03039	Control knob, 2V	2	EA	ABS			
18	20-03040	Control knob holder, 2V	2	EA	POM			
19	71168	Rotary Switch 16A, SA16 2-1	2	EA				
20	71434	Round head screw M4 x 20	4	EA				
21	24-43013	Pad 3T*8*1000, EPDM	0.4	M	EPDM			
22	23-32021	Display control card V1.1 with cable	1	EA				
23	14-40033	Pan head tapping screw, M4 X 8, II	8	EA				
24	70500	Screw T/T M4.8 x 20	6	EA				
25	70325	Cable gland PG21	1	EA				
26	70320	Cable gland PG25	1	EA				
27	70326	Cable gland PG16	2	EA				
28	14-40049	Pan head tapping screw, M3 X 8, II	2	EA				
29	33-33020	Fuse holder, R3-57	1	EA		2020.02		
30	13-33021	Fuse 5X20 4A, CERM	1	EA		2020.02		
31	70769	Buzzer DC12V	1	EA				
32	21-13008	Pressure gauge bracket, XD/E	1	EA	STS			
33	14-40034	Hex. Socket Bolt M5 X 35	2	EA				
35	14-41009	Washer M5, SUS	4	EA				
A	82-24008	Pressure gauge 0-15bar D.50 PD4, 2V.	1	SET				
-	83-35032	Control Box Assy XE(05K, 200~230V)	1	SET				

TABLE NO. 014

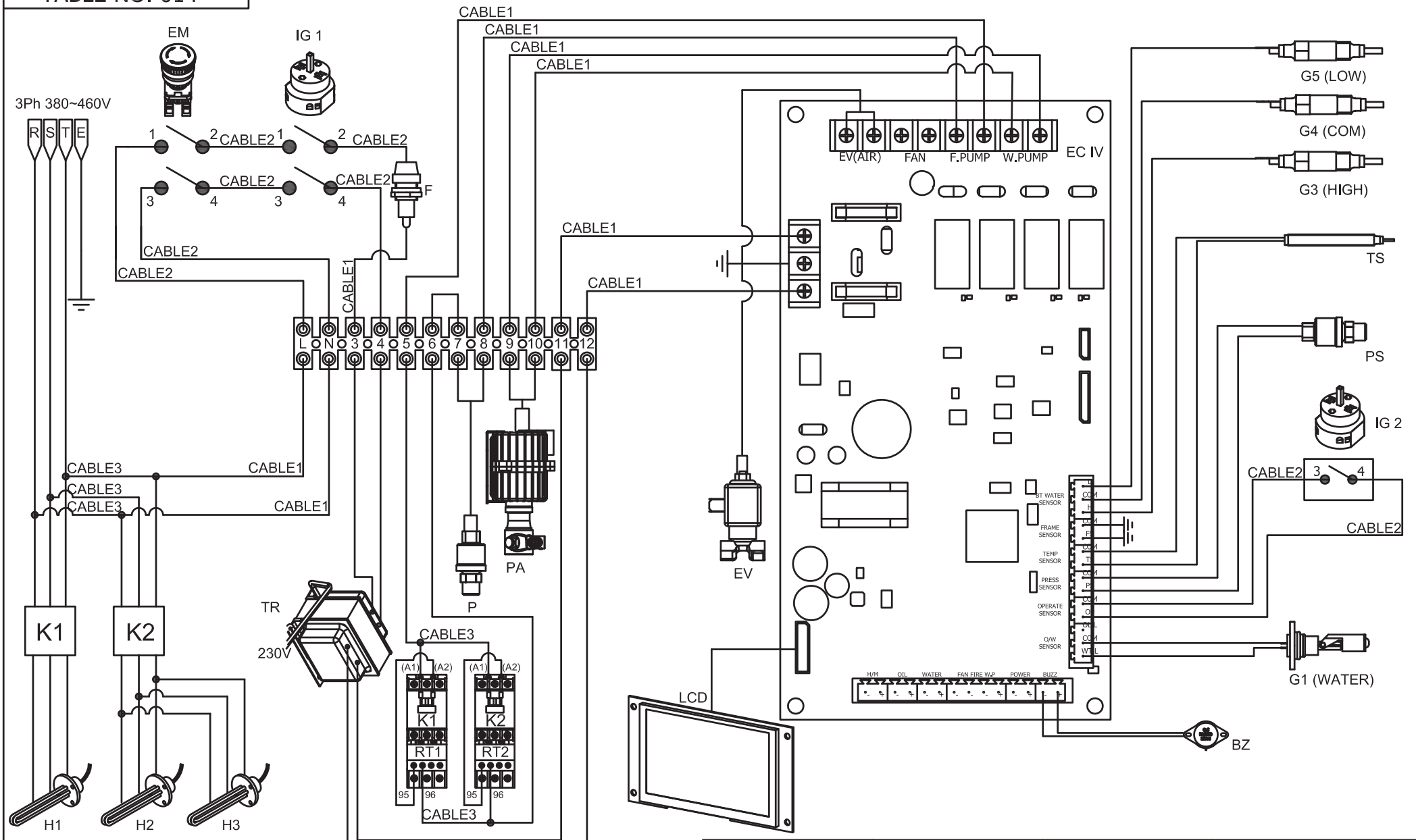

DRAFTED BY	CHECKED BY	APPROVED BY	DRW. DATE
JD.LEE	YM.LEE	TW.KWON	2021.02.01

SJE Corporation, Ltd.
Global Leader of Green solutions

TITLE			
SCHEMATIC DIAGRAM (27K)			
MODEL	SCALE	SIZE	
OPTIMA XE	1:	A4	

TABLE NO. 014 : SCHEMATIC DIAGRAM (27K)

REF NO.	PART NO.	DESCRIPTION	Q'TY	UNIT	MATERIAL	FROM	TO	REPLACED NO.
IG1	71168	Rotary Switch 16A, SA16 2-1	1	EA				
IG2	71168	Rotary Switch 16A, SA16 2-1	1	EA				
EC IV	23-32020	Electric control card AC 2.3 - GNT	1	EA				
TS	23-33019	Thermistor temp sensor L.1000mm 2V.	1	EA		2020.01		
F	13-33021	Fuse 5X20 4A, CERM	1	EA		2020.02		
PS	70081	Pressure switch, Auto reset, N/C, 8.5/7 bar	1	EA				
P	70082	Pressure switch, Auto reset, N/C, 9.5/8 bar	1	EA				
PA	70133	Feedwater pump MO204V viton	1	EA				
BZ	70769	Buzzer DC12V	1	EA				
G1	23-33022	Float level switch, white, 2V.	1	EA		2020.07		
G3	70175	Water probe sensor	1	EA				
G4	70175	Water probe sensor	1	EA				
G5	70175	Water probe sensor	1	EA				
EV	71231	Electronic valve JYZ-3E 230V, air purge	1	EA				
K1	70733	Contactor MC-22B AC220V	1	EA				
K2	13-32002	Contactor MC 40A	1	EA				
RT1	70735	Thermal Relay MT-32 (12-18A)	1	EA				
RT1	13-32004	Thermal Relay MT-32 (9-13A)	(1)	EA				
RT2	70734	Thermal Relay MT-32 (22-32A)	1	EA				
RT2	13-32005	Thermal Relay MT-32 (16-22A)	(1)	EA				
H(1,2,3)	70460	Electric heater 9KW, 3ph 230/400V	3	EA				
H(1,2,3)	70469	Electric heater 9KW, 3ph 415V	(3)	EA				
H(1,2,3)	70471	Electric heater 9KW, 3ph 440V	(3)	EA				
H(1,2,3)	70470	Electric heater 9KW, 3ph 460V	(3)	EA				
H(1,2,3)	70478	Electric heater 9KW, 3ph 480V	(3)	EA				
H(1,2,3)	23-34012	Electric heater 9KW, 3ph 600V	(3)	EA				
TR	71175	Transformer 400-230V 50/60Hz 250VA, Connector	1	EA				
TR	23-32024	Transformer 415-230V 50/60Hz 250VA, Connector	(1)	EA				
TR	71176	Transformer 440-230V 50/60Hz 250VA, Connector	(1)	EA				
TR	23-32011	Transformer 460-230V 50/60Hz 250VA Double	(1)	EA				
TR	23-32010	Transformer 480-230V 50/60Hz 250VA Double	(1)	EA				
TR	23-32022	Transformer 600-230V 50/60Hz 250VA, Double	(1)	EA				
LCD	23-32021	Display control card V1.1 with cable	1	EA				
CABLE1	23-31007	Cables for PCB Connector, XE	1	EA				
CABLE2	23-31008	Cables for power and steam Switch, XE	1	EA				
CABLE3	23-31009	Cables for MC connection, XE	1	EA				
EM	13-33008	Emergency Stop Switch, DECA A20B-V4E02R	1	EA				

TABLE NO. 015

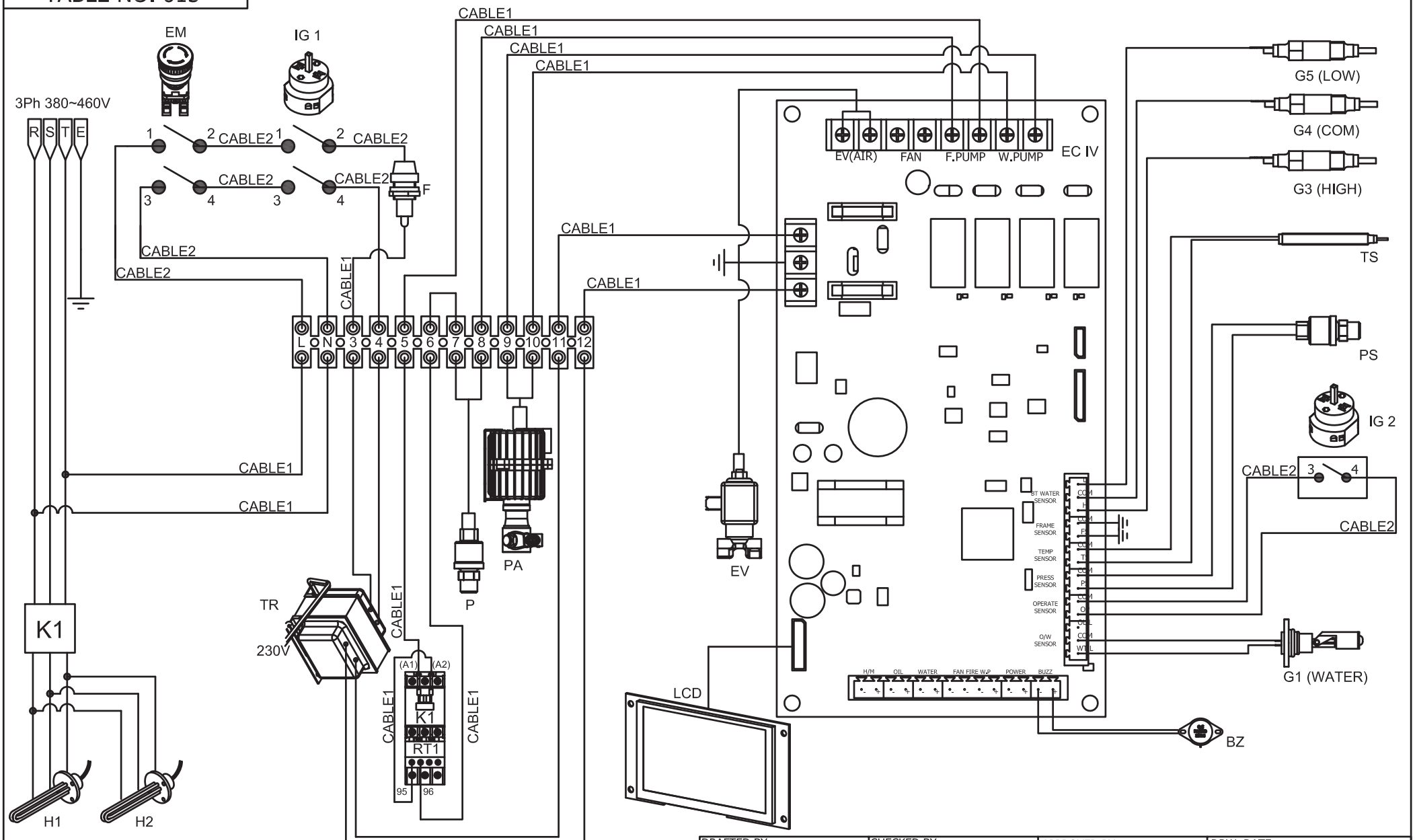

DRAFTED BY	CHECKED BY	APPROVED BY	DRW. DATE
JD.LEE	YM.LEE	TW.KWON	2021.02.01

SJE Corporation, Ltd.
Global Leader of Green solutions

TITLE: SCHEMATIC DIAGRAM (18K)
380V/415V/440V/460V/480V/600V

MODEL	SCALE	SIZE
OPTIMA XE	1:	A4

TABLE NO. 015 : SCHEMATIC DIAGRAM (18K, 380V/415V/440V/460V/480V/600V)

REF NO.	PART NO.	DESCRIPTION	Q'TY	UNIT	MATERIAL	FROM	TO	REPLACED NO.
IG1	71168	Rotary Switch 16A, SA16 2-1	1	EA				
IG2	71168	Rotary Switch 16A, SA16 2-1	1	EA				
EC IV	23-32020	Electric control card AC 2.3 - GNT	1	EA				
TS	23-33019	Thermistor temp sensor L.1000mm 2V.	1	EA		2020.01		
F	13-33021	Fuse 5X20 4A, CERM	1	EA		2020.02		
PS	70081	Pressure switch, Auto reset, N/C, 8.5/7 bar	1	EA				
P	70082	Pressure switch, Auto reset, N/C, 9.5/8 bar	1	EA				
PA	70133	Feedwater pump MO204V viton	1	EA				
BZ	70769	Buzzer DC12V	1	EA				
G1	23-33022	Float level switch, white, 2V.	1	EA		2020.07		
G3	70175	Water probe sensor	1	EA				
G4	70175	Water probe sensor	1	EA				
G5	70175	Water probe sensor	1	EA				
EV	71231	Electronic valve JYZ-3E 230V, air purge	1	EA				
K	13-32002	Contactor MC 40A	1	EA				
RT	70734	Thermal Relay MT-32 (22-32A)	1	EA				
RT	13-32005	Thermal Relay MT-32 (16-22A)	(1)	EA				
H(1,2)	70460	Electric heater 9KW, 3ph 230/400V	2	EA				
H(1,2)	70469	Electric heater 9KW, 3ph 415V	(2)	EA				
H(1,2)	70471	Electric heater 9KW, 3ph 440V	(2)	EA				
H(1,2)	70470	Electric heater 9KW, 3ph 460V	(2)	EA				
H(1,2)	70478	Electric heater 9KW, 3ph 480V	(2)	EA				
H(1,2)	23-34012	Electric heater 9KW, 3ph 600V	(2)	EA				
TR	71175	Transformer 400-230V 50/60Hz 250VA, Connector	1	EA				
TR	23-32024	Transformer 415-230V 50/60Hz 250VA, Connector	(1)	EA				
TR	71176	Transformer 440-230V 50/60Hz 250VA, Connector	(1)	EA				
TR	23-32011	Transformer 460-230V 50/60Hz 250VA Double	(1)	EA				
TR	23-32010	Transformer 480-230V 50/60Hz 250VA Double	(1)	EA				
TR	23-32022	Transformer 600-230V 50/60Hz 250VA, Double	(1)	EA				
LCD	23-32021	Display control card V1.1 with cable	1	EA				
CABLE1	23-31007	Cables for PCB Connector, XE	1	EA				
CABLE2	23-31008	Cables for power and steam Switch, XE	1	EA				
EM	13-33008	Emergency Stop Switch, DECA A20B-V4E02R	1	EA				

TABLE NO. 016

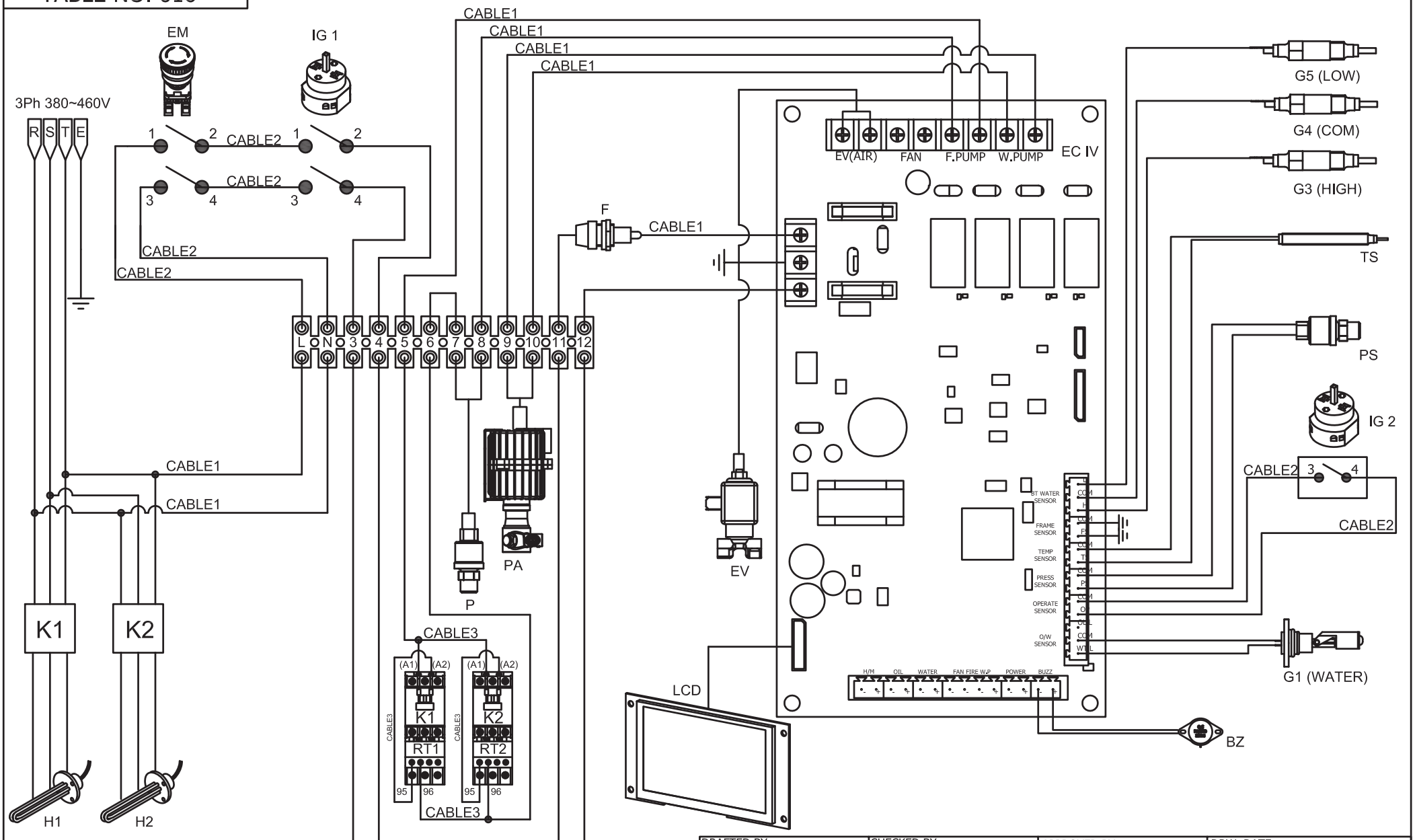

DRAFTED BY	CHECKED BY	APPROVED BY	DRW. DATE
JD.LEE	YM.LEE	TW.KWON	2021.02.01

SJE Corporation, Ltd.
Global Leader of Green solutions

TITLE: SCHEMATIC DIAGRAM (18K, 230V)

MODEL	SCALE	SIZE
OPTIMA XE	1:	A4

TABLE NO. 016 : SCHEMATIC DIAGRAM (18K, 230V)

REF NO.	PART NO.	DESCRIPTION	Q'TY	UNIT	MATERIAL	FROM	TO	REPLACED NO.
IG1	71168	Rotary Switch 16A, SA16 2-1	1	EA				
IG2	71168	Rotary Switch 16A, SA16 2-1	1	EA				
EC IV	23-32020	Electric control card AC 2.3 - GNT	1	EA				
TS	23-33019	Thermistor temp sensor L.1000mm 2V.	1	EA		2020.01		
F	13-33021	Fuse 5X20 4A, CERM	1	EA		2020.02		
PS	70081	Pressure switch, Auto reset, N/C, 8.5/7 bar	1	EA				
P	70082	Pressure switch, Auto reset, N/C, 9.5/8 bar	1	EA				
PA	70133	Feedwater pump MO204V viton	1	EA				
BZ	70769	Buzzer DC12V	1	EA				
G1	23-33022	Float level switch, white, 2V.	1	EA		2020.07		
G3	70175	Water probe sensor	1	EA				
G4	70175	Water probe sensor	1	EA				
G5	70175	Water probe sensor	1	EA				
EV	71231	Electronic valve JYZ-3E 230V, air purge	1	EA				
K1,2	13-32002	Contactor MC 40A	1	EA				
RT1,2	70734	Thermal Relay MT-32 (22-32A)	1	EA				
H(1,2)	70460	Electric heater 9KW, 3ph 230/400V	2	EA				
LCD	23-32021	Display control card V1.1 with cable	1	EA				
CABLE1	23-31007	Cables for PCB Connector, XE	1	EA				
CABLE2	23-31008	Cables for power and steam Switch, XE	1	EA				
CABLE3	23-31009	Cables for MC connection, XE	1	EA				
EM	13-33008	Emergency Stop Switch, DECA A20B-V4E02R	1	EA				

TABLE NO. 017

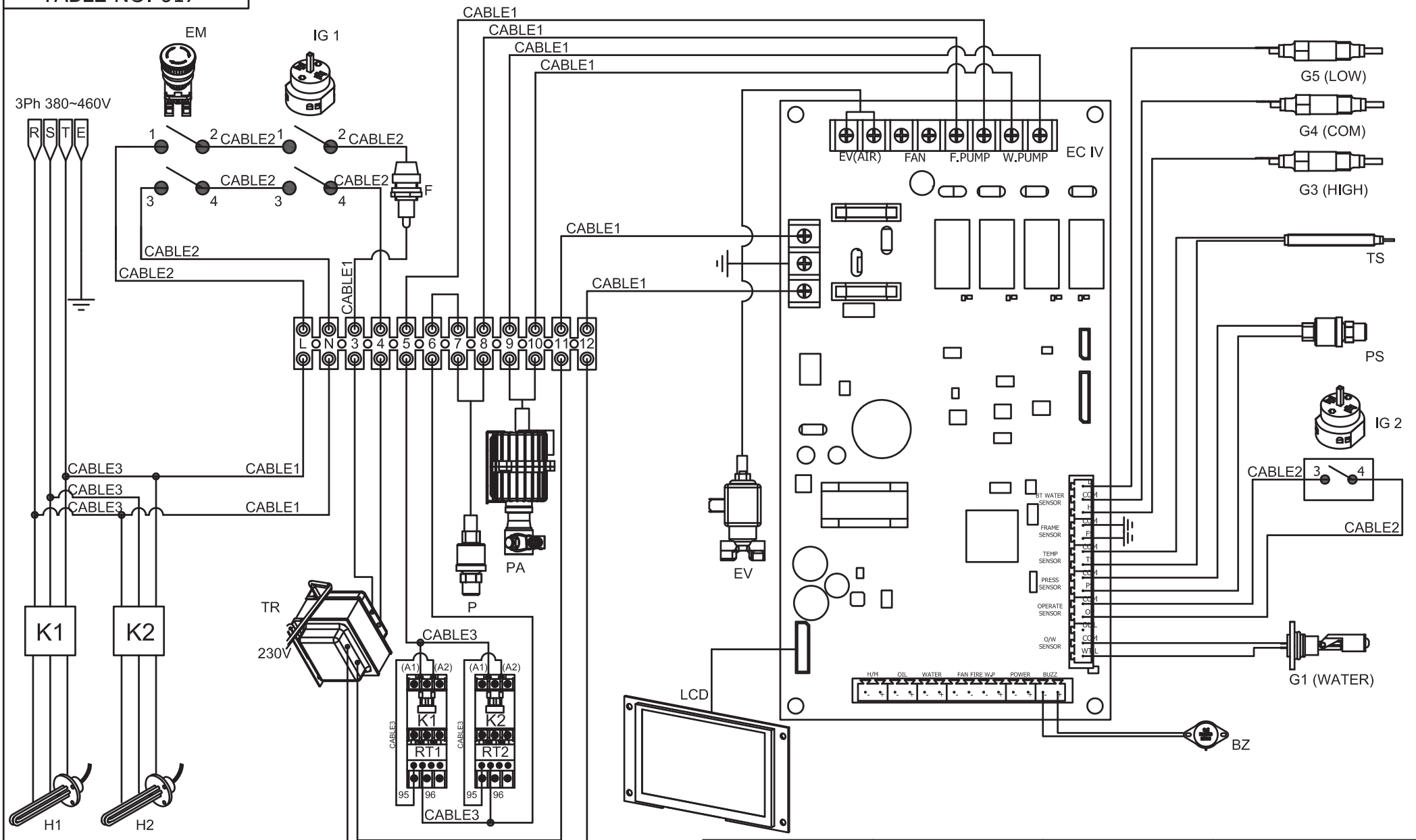

DRAFTED BY	CHECKED BY	APPROVED BY	DRW. DATE
JD.LEE	YM.LEE	TW.KWON	2021.02.01

SJE Corporation, Ltd.
Global Leader of Green solutions

TITLE: SCHEMATIC DIAGRAM (18K, 200V/208V)

MODEL	SCALE	SIZE
OPTIMA XE	1:	A4

TABLE NO. 017 : SCHEMATIC DIAGRAM (18K, 200V/208V)

REF NO.	PART NO.	DESCRIPTION	Q'TY	UNIT	MATERIAL	FROM	TO	REPLACED NO.
IG1	71168	Rotary Switch 16A, SA16 2-1	1	EA				
IG2	71168	Rotary Switch 16A, SA16 2-1	1	EA				
EC IV	23-32020	Electric control card AC 2.3 - GNT	1	EA				
TS	23-33019	Thermistor temp sensor L.1000mm 2V.	1	EA		2020.01		
F	13-33021	Fuse 5X20 4A, CERM	1	EA		2020.02		
PS	70081	Pressure switch, Auto reset, N/C, 8.5/7 bar	1	EA				
P	70082	Pressure switch, Auto reset, N/C, 9.5/8 bar	1	EA				
PA	70133	Feedwater pump MO204V viton	1	EA				
BZ	70769	Buzzer DC12V	1	EA				
G1	23-33022	Float level switch, white, 2V.	1	EA		2020.07		
G3	70175	Water probe sensor	1	EA				
G4	70175	Water probe sensor	1	EA				
G5	70175	Water probe sensor	1	EA				
EV	71231	Electronic valve JYZ-3E 230V, air purge	1	EA				
K1,2	13-32002	Contactor MC 40A	1	EA				
RT1,2	70734	Thermal Relay MT-32 (22-32A)	1	EA				
H(1,2)	70460	Electric heater 9KW, 3ph 230/400V	2	EA				
TR	23-32025	Transformer 200-230V 50/60Hz 250VA, Connector	1	EA				
TR	23-32014	Transformer 208-230V 50/60Hz 250VA Double	(1)	EA				
LCD	23-32021	Display control card V1.1 with cable	1	EA				
CABLE1	23-31007	Cables for PCB Connector, XE	1	EA				
CABLE2	23-31008	Cables for power and steam Switch, XE	1	EA				
CABLE3	23-31009	Cables for MC connection, XE	1	EA				
EM	13-33008	Emergency Stop Switch, DECA A20B-V4E02R	1	EA				

TABLE NO. 018

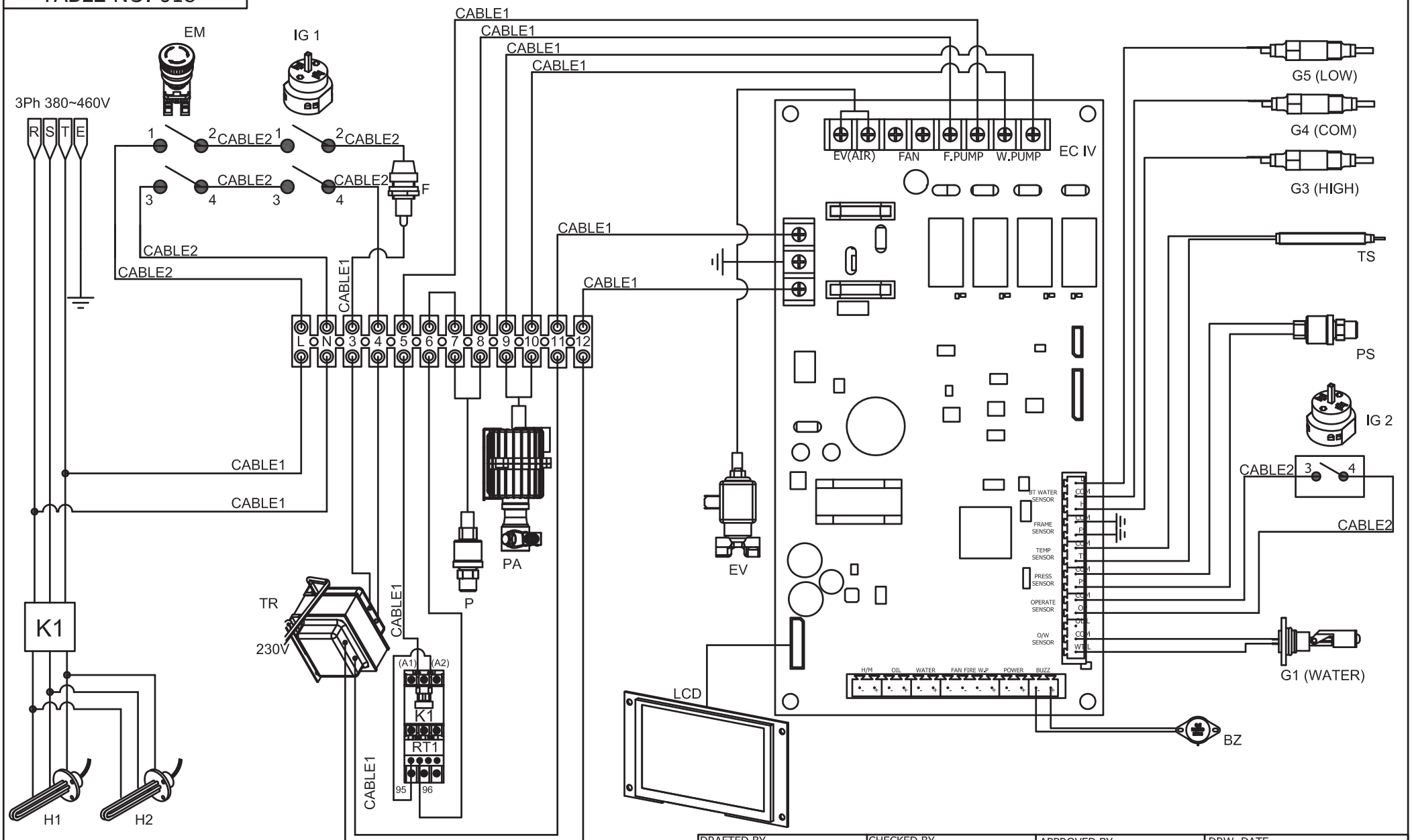

DRAFTED BY	CHECKED BY	APPROVED BY	DRW. DATE
JD.LEE	YM.LEE	TW.KWON	2021.02.01

SJE Corporation, Ltd.
Global Leader of Green solutions

TITLE: SCHEMATIC DIAGRAM (12K)
380V/415V/440V/460V/480V/600V

MODEL	SCALE	SIZE
OPTIMA XE	1:	A4

TABLE NO. 018 : SCHEMATIC DIAGRAM (12K, 380V/415V/440V/460V/480V/600V)

REF NO.	PART NO.	DESCRIPTION	Q'TY	UNIT	MATERIAL	FROM	TO	REPLACED NO.
IG1	71168	Rotary Switch 16A, SA16 2-1	1	EA				
IG2	71168	Rotary Switch 16A, SA16 2-1	1	EA				
EC IV	23-32020	Electric control card AC 2.3 - GNT	1	EA				
TS	23-33019	Thermistor temp sensor L.1000mm 2V.	1	EA		2020.01		
F	13-33021	Fuse 5X20 4A, CERM	1	EA		2020.02		
PS	70081	Pressure switch, Auto reset, N/C, 8.5/7 bar	1	EA				
P	70082	Pressure switch, Auto reset, N/C, 9.5/8 bar	1	EA				
PA	70133	Feedwater pump MO204V viton	1	EA				
BZ	70769	Buzzer DC12V	1	EA				
G1	23-33022	Float level switch, white, 2V.	1	EA		2020.07		
G3	70175	Water probe sensor	1	EA				
G4	70175	Water probe sensor	1	EA				
G5	70175	Water probe sensor	1	EA				
EV	71231	Electronic valve JYZ-3E 230V, air purge	1	EA				
K1	13-32003	Contactor MC 32A	1	EA				
RT1	13-32005	Thermal Relay MT-32 (16-22A)	1	EA				
RT1	70735	Thermal Relay MT-32 (12-18A)	(1)	EA				
H(1,2)	70459	Electric heater 6KW, 3ph 230/400V	2	EA				
H(1,2)	70464	Electric heater 6KW, 3ph 415V	(2)	EA				
H(1,2)	70475	Electric heater 6KW, 3ph 440V	(2)	EA				
H(1,2)	70468	Electric heater 6KW, 3ph 460V	(2)	EA				
H(1,2)	70479	Electric heater 6KW, 3ph 480V	(2)	EA				
H(1,2)	23-34014	Electric heater 6KW, 3ph 600V	(2)	EA				
TR	71175	Transformer 400-230V 50/60Hz 250VA, Connector	1	EA				
TR	23-32024	Transformer 415-230V 50/60Hz 250VA, Connector	(1)	EA				
TR	71176	Transformer 440-230V 50/60Hz 250VA, Connector	(1)	EA				
TR	23-32011	Transformer 460-230V 50/60Hz 250VA Double	(1)	EA				
TR	23-32010	Transformer 480-230V 50/60Hz 250VA Double	(1)	EA				
TR	23-32022	Transformer 600-230V 50/60Hz 250VA, Double	(1)	EA				
LCD	23-32021	Display control card V1.1 with cable	1	EA				
CABLE1	23-31007	Cables for PCB Connector, XE	1	EA				
CABLE2	23-31008	Cables for power and steam Switch, XE	1	EA				
EM	13-33008	Emergency Stop Switch, DECA A20B-V4E02R	1	EA				

TABLE NO. 019

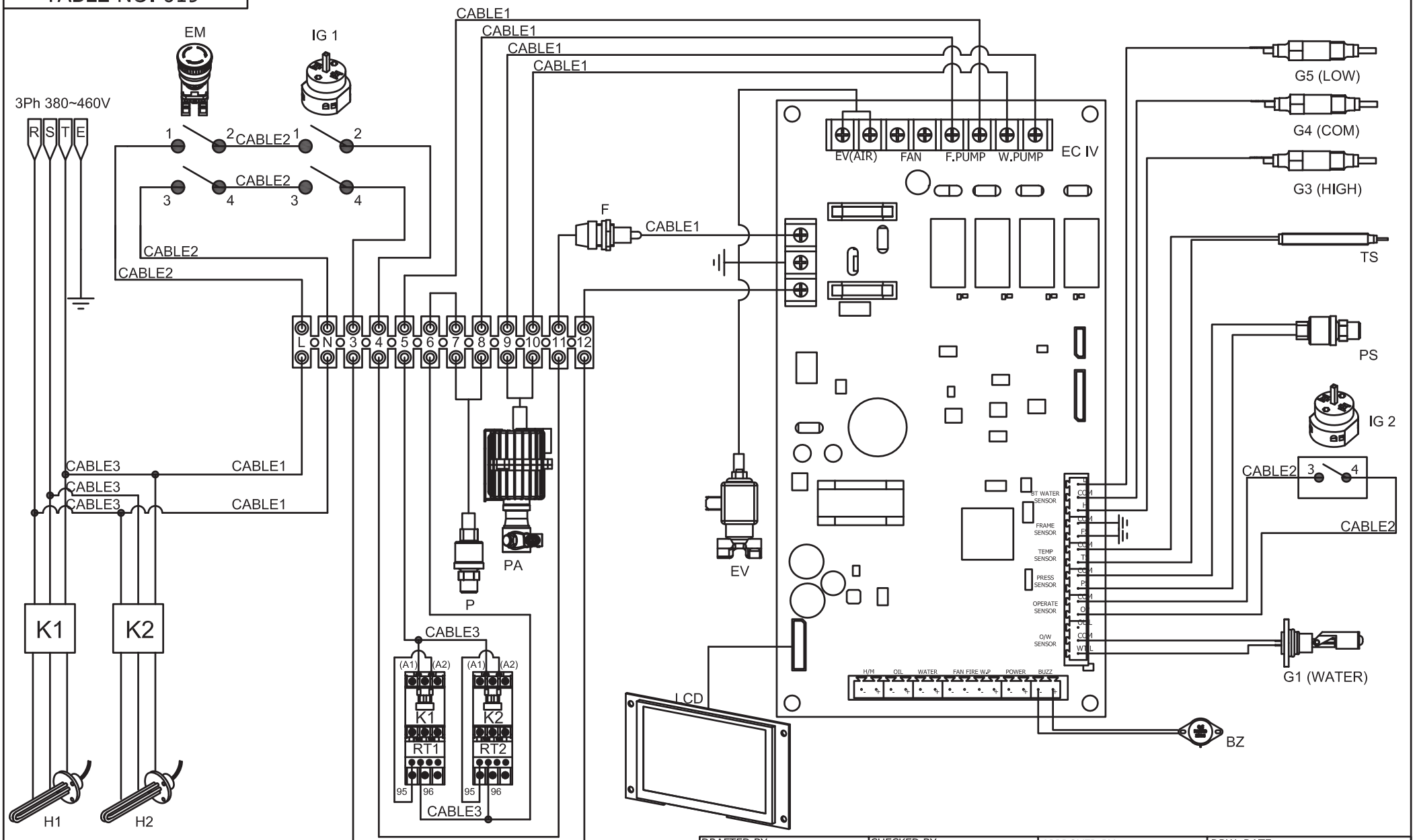

DRAFTED BY	CHECKED BY	APPROVED BY	DRW. DATE
JD.LEE	YM.LEE	TW.KWON	2021.02.01

SJE Corporation, Ltd.
Global Leader of Green solutions

TITLE: SCHEMATIC DIAGRAM (12K, 230V)

MODEL	SCALE	SIZE
OPTIMA XE	1:	A4

TABLE NO. 019 : SCHEMATIC DIAGRAM (12K, 230V)

REF NO.	PART NO.	DESCRIPTION	Q'TY	UNIT	MATERIAL	FROM	TO	REPLACED NO.
IG1	71168	Rotary Switch 16A, SA16 2-1	1	EA				
IG2	71168	Rotary Switch 16A, SA16 2-1	1	EA				
EC IV	23-32020	Electric control card AC 2.3 - GNT	1	EA				
TS	23-33019	Thermistor temp sensor L.1000mm 2V.	1	EA		2020.01		
F	13-33021	Fuse 5X20 4A, CERM	1	EA		2020.02		
PS	70081	Pressure switch, Auto reset, N/C, 8.5/7 bar	1	EA				
P	70082	Pressure switch, Auto reset, N/C, 9.5/8 bar	1	EA				
PA	70133	Feedwater pump MO204V viton	1	EA				
BZ	70769	Buzzer DC12V	1	EA				
G1	23-33022	Float level switch, white, 2V.	1	EA		2020.07		
G3	70175	Water probe sensor	1	EA				
G4	70175	Water probe sensor	1	EA				
G5	70175	Water probe sensor	1	EA				
EV	71231	Electronic valve JYZ-3E 230V, air purge	1	EA				
K(1,2)	13-32003	Contactor MC 32A	2	EA				
RT(1,2)	13-32005	Thermal Relay MT-32 (16-22A)	2	EA				
H(1,2)	70459	Electric heater 6KW, 3ph 230/400V	(2)	EA				
LCD	23-32021	Display control card V1.1 with cable	1	EA				
CABLE1	23-31007	Cables for PCB Connector, XE	1	EA				
CABLE2	23-31008	Cables for power and steam Switch, XE	1	EA				
CABLE3	23-31009	Cables for MC connection, XE	1	EA				
EM	13-33008	Emergency Stop Switch, DECA A20B-V4E02R	1	EA				

TABLE NO. 020

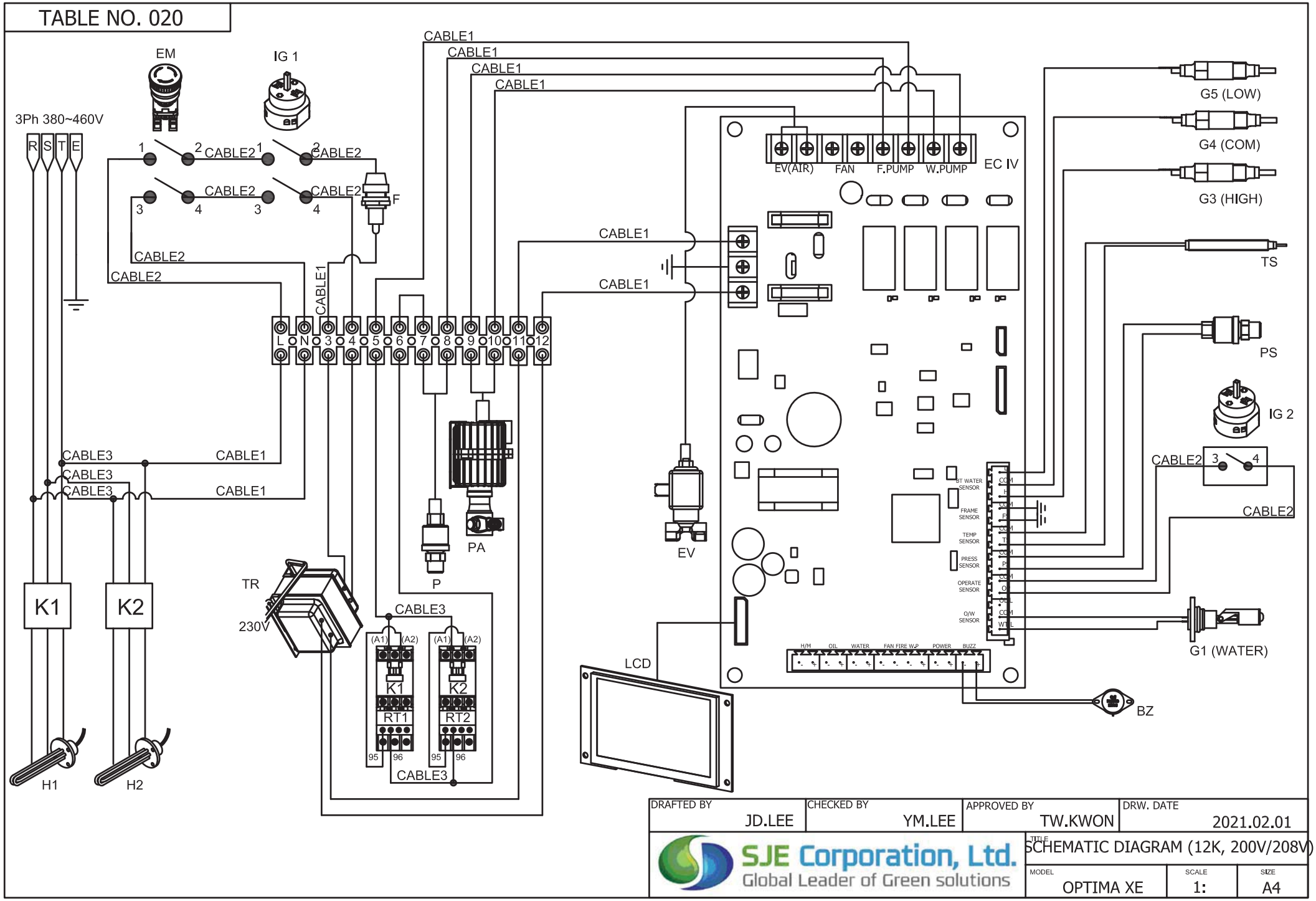

DRAFTED BY	CHECKED BY	APPROVED BY	DRW. DATE
JD.LEE	YM.LEE	TW.KWON	2021.02.01

SJE Corporation, Ltd.
Global Leader of Green solutions

TITLE: SCHEMATIC DIAGRAM (12K, 200V/208V)

MODEL	SCALE	SIZE
OPTIMA XE	1:	A4

TABLE NO. 020 : SCHEMATIC DIAGRAM (12K, 200V/208V)

REF NO.	PART NO.	DESCRIPTION	Q'TY	UNIT	MATERIAL	FROM	TO	REPLACED NO.
IG1	71168	Rotary Switch 16A, SA16 2-1	1	EA				
IG2	71168	Rotary Switch 16A, SA16 2-1	1	EA				
EC IV	23-32020	Electric control card AC 2.3 - GNT	1	EA				
TS	23-33019	Thermistor temp sensor L.1000mm 2V.	1	EA		2020.01		
F	13-33021	Fuse 5X20 4A, CERM	1	EA		2020.02		
PS	70081	Pressure switch, Auto reset, N/C, 8.5/7 bar	1	EA				
P	70082	Pressure switch, Auto reset, N/C, 9.5/8 bar	1	EA				
PA	70133	Feedwater pump MO204V viton	1	EA				
BZ	70769	Buzzer DC12V	1	EA				
G1	23-33022	Float level switch, white, 2V.	1	EA		2020.07		
G3	70175	Water probe sensor	1	EA				
G4	70175	Water probe sensor	1	EA				
G5	70175	Water probe sensor	1	EA				
EV	71231	Electronic valve JYZ-3E 230V, air purge	1	EA				
K(1,2)	13-32003	Contactor MC 32A	2	EA				
RT(1,2)	13-32005	Thermal Relay MT-32 (16-22A)	2	EA				
H(1,2)	70461	Electric heater 6KW, 3ph 208V	2	EA				
TR	23-32025	Transformer 200-230V 50/60Hz 250VA, Connector	1	EA				
TR	23-32014	Transformer 208-230V 50/60Hz 250VA Double	(1)	EA				
LCD	23-32021	Display control card V1.1 with cable	1	EA				
CABLE1	23-31007	Cables for PCB Connector, XE	1	EA				
CABLE2	23-31008	Cables for power and steam Switch, XE	1	EA				
CABLE3	23-31009	Cables for MC connection, XE	1	EA				
EM	13-33008	Emergency Stop Switch, DECA A20B-V4E02R	1	EA				

TABLE NO. 021

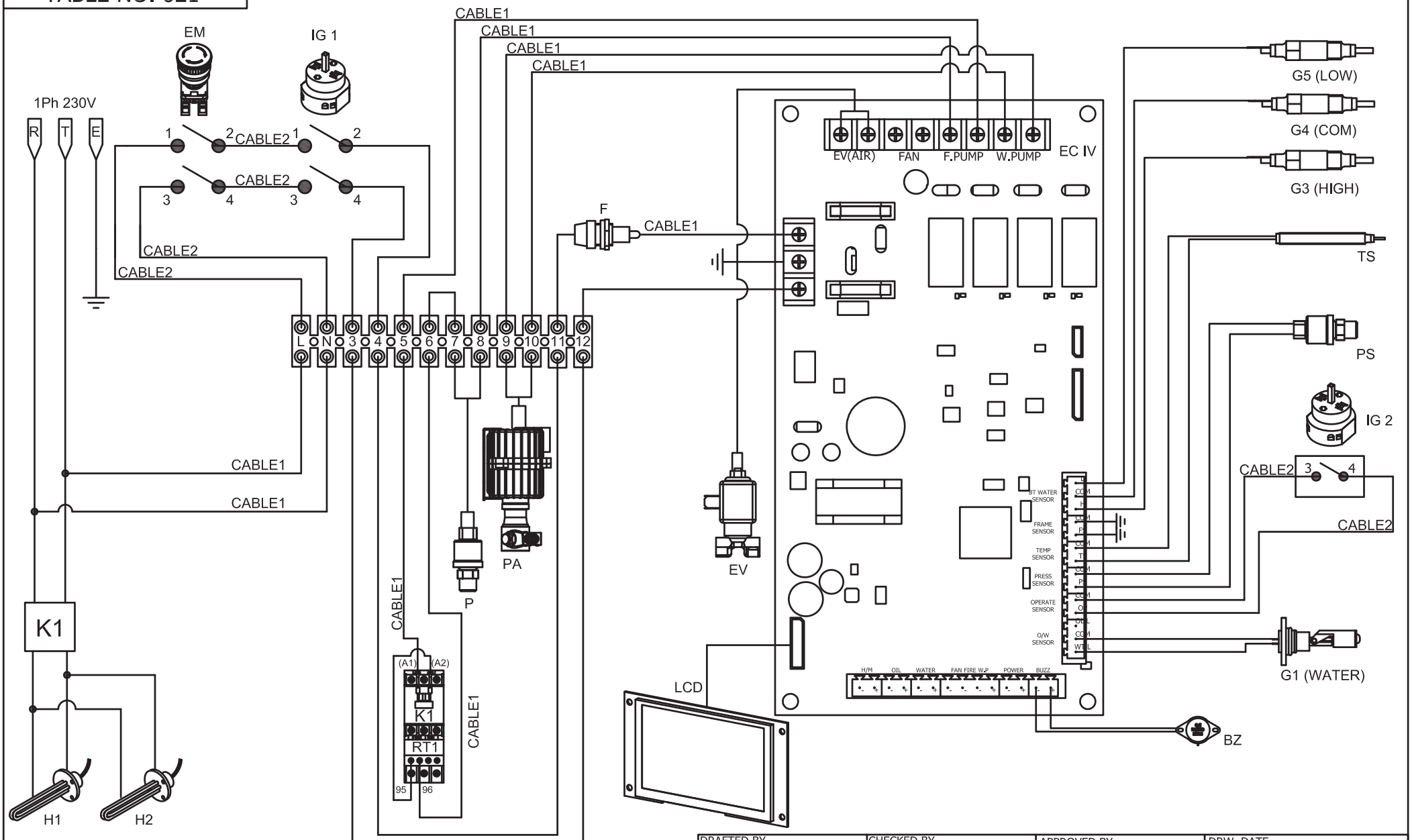

DRAFTED BY	CHECKED BY	APPROVED BY	DRW. DATE
JD.LEE	YM.LEE	TW.KWON	2021.02.01

SJE Corporation, Ltd.
Global Leader of Green solutions

TITLE: SCHEMATIC DIAGRAM (05K, 230V)

MODEL	SCALE	SIZE
OPTIMA XE	1:	A4

TABLE NO. 021 : SCHEMATIC DIAGRAM (05K, 230V)

REF NO.	PART NO.	DESCRIPTION	Q'TY	UNIT	MATERIAL	FROM	TO	REPLACED NO.
IG1	71168	Rotary Switch 16A, SA16 2-1	1	EA				
IG2	71168	Rotary Switch 16A, SA16 2-1	1	EA				
EC IV	23-32020	Electric control card AC 2.3 - GNT	1	EA				
TS	23-33019	Thermistor temp sensor L.1000mm 2V.	1	EA		2020.01		
F	13-33021	Fuse 5X20 4A, CERM	1	EA		2020.02		
PS	70081	Pressure switch, Auto reset, N/C, 8.5/7 bar	1	EA				
P	70082	Pressure switch, Auto reset, N/C, 9.5/8 bar	1	EA				
PA	70133	Feedwater pump MO204V viton	1	EA				
BZ	70769	Buzzer DC12V	1	EA				
G1	23-33022	Float level switch, white, 2V.	1	EA		2020.07		
G3	70175	Water probe sensor	1	EA				
G4	70175	Water probe sensor	1	EA				
G5	70175	Water probe sensor	1	EA				
EV	71231	Electronic valve JYZ-3E 230V, air purge	1	EA				
K	13-32003	Contactor MC 32A	1	EA				
RT	70734	Thermal Relay MT-32 (22-32A)	1	EA				
H1	70458	Electric heater 3KW, 230V	1	EA				
H2	70457	Electric heater 2KW, 230V	1	EA				
LCD	23-32021	Display control card V1.1 with cable	1	EA				
CABLE1	23-31007	Cables for PCB Connector, XE	1	EA				
CABLE2	23-31008	Cables for power and steam Switch, XE	1	EA				
EM	13-33008	Emergency Stop Switch, DECA A20B-V4E02R	1	EA				

TABLE NO. 022

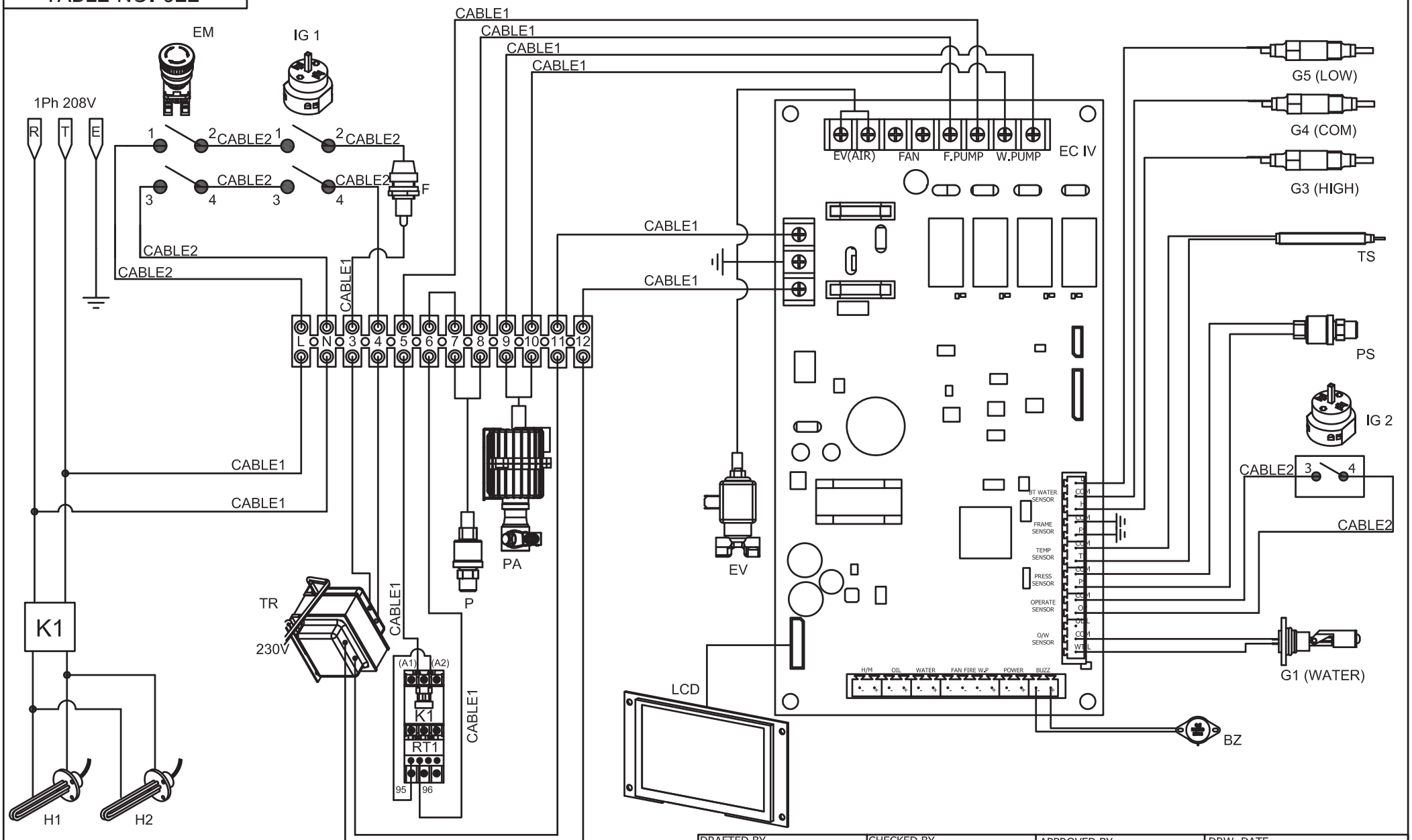

DRAFTED BY	CHECKED BY	APPROVED BY	DRW. DATE
JD.LEE	YM.LEE	TW.KWON	2021.02.01

SJE Corporation, Ltd.
Global Leader of Green solutions

TITLE: SCHEMATIC DIAGRAM (05K, 200V/208V)

MODEL	SCALE	SIZE
OPTIMA XE	1:	A4

TABLE NO. 022 : SCHEMATIC DIAGRAM (05K, 200V/208V)

REF NO.	PART NO.	DESCRIPTION	Q'TY	UNIT	MATERIAL	FROM	TO	REPLACED NO.
IG1	71168	Rotary Switch 16A, SA16 2-1	1	EA				
IG2	71168	Rotary Switch 16A, SA16 2-1	1	EA				
EC IV	23-32020	Electric control card AC 2.3 - GNT	1	EA				
TS	23-33019	Thermistor temp sensor L.1000mm 2V.	1	EA		2020.01		
F	13-33021	Fuse 5X20 4A, CERM	1	EA		2020.02		
PS	70081	Pressure switch, Auto reset, N/C, 8.5/7 bar	1	EA				
P	70082	Pressure switch, Auto reset, N/C, 9.5/8 bar	1	EA				
PA	70133	Feedwater pump MO204V viton	1	EA				
BZ	70769	Buzzer DC12V	1	EA				
G1	23-33022	Float level switch, white, 2V.	1	EA		2020.07		
G3	70175	Water probe sensor	1	EA				
G4	70175	Water probe sensor	1	EA				
G5	70175	Water probe sensor	1	EA				
EV	71231	Electronic valve JYZ-3E 230V, air purge	1	EA				
K	13-32003	Contactor MC 32A	1	EA				
RT	70734	Thermal Relay MT-32 (22-32A)	1	EA				
H1	70458	Electric heater 3KW, 230V	1	EA				
H2	70457	Electric heater 2KW, 230V	1	EA				
TR	23-32025	Transformer 200-230V 50/60Hz 250VA, Connector	1	EA				
TR	23-32014	Transformer 208-230V 50/60Hz 250VA Double	(1)	EA				
LCD	23-32021	Display control card V1.1 with cable	1	EA				
CABLE1	23-31007	Cables for PCB Connector, XE	1	EA				
CABLE2	23-31008	Cables for power and steam Switch, XE	1	EA				
EM	13-33008	Emergency Stop Switch, DECA A20B-V4E02R	1	EA				

TABLE NO. 23

(1)

START UP	SHUT DOWN
① POWER (Emergency stop) switch ON ② STEAM switch ON If steam goes off, check for shortage in water and fuel tanks. ③ Ready for use Once pressure reaches 8 bars, Optima is ready to use.	① STEAM switch OFF. Then wait for 30 seconds. ② POWER switch OFF ③ Close steam outlet valves Then pull gun trigger to release steam from hoses and guns. With hand pressurizer, detach hoses.
Encendido	**Apagado**
① Interruptor de Encendido (Apagado de Emergencia) en Posición de Encendido ② Interruptor de Vapor en Posición de Encendido Si suena la alarma, revisar niveles en tanques de agua y combustible. ③ Lista para el uso Cuando la presión llegue a 8 bars, Optima está lista para el uso.	① Interruptor de Vapor en Posición de Apagado Espere 30 segundos. ② Interruptor de Encendido en Posición de Apagado ③ Cierre las válvulas de escape de vapor Descuide apriete el gatillo de la pistola para liberar vapor de las mangueras y pistola. Prosiguiendo sus manos, retirarse las mangueras.
METTRE EN MARCHE	**ARRÊTER**
① Mettre l'interrupteur d'ALIMENTATION (arrêt d'urgence) sur MARCHE ② Mettre l'interrupteur de VAPEUR sur MARCHE Si l'alarme s'intensifie, vérifier le niveau des réservoirs d'eau et d'huile. ③ Prêt à l'emploi Une fois que la pression atteint 8 bars, l'Optima est prêt à l'emploi.	① Mettre l'interrupteur de VAPEUR sur ARRÊT Puis attendre 30 secondes. ② Mettre l'interrupteur d'ALIMENTATION sur ARRÊT ③ Fermer les soupapes de sortie de vapeur Puis tirer sur la gâchette pour faire sortir la vapeur des tuyaux et pistolets. Equipé de protection pour les mains, détacher les tuyaux.

Always read user manual before use./Siempre lea el manual del usuario antes de usar./Toujours lire le manuel de l'utilisateur avant utilisation.

(2)

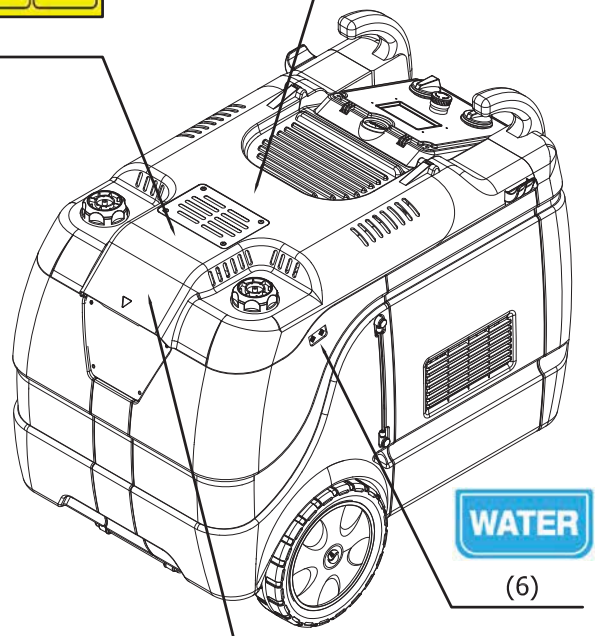

(6)

(5)

(3)

(4)

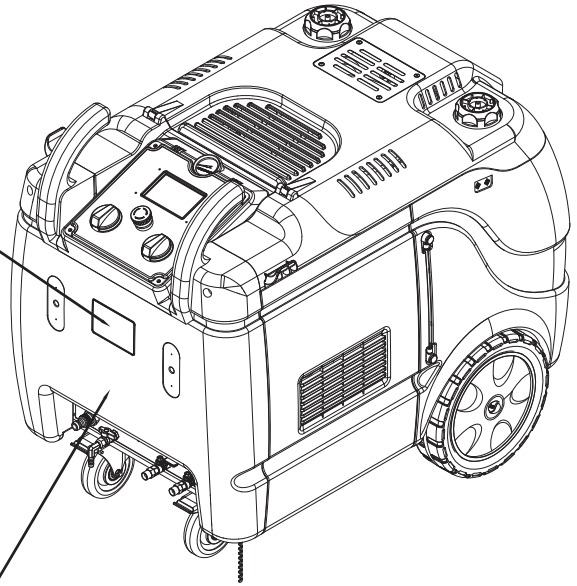

DRAFTED BY	CHECKED BY	APPROVED BY	DRW. DATE
JD.LEE	YM.LEE	TW.KWON	2021.02.01

SJE Corporation, Ltd.
Global Leader of Green solutions

TITLE		
OPTIMA XE STICKER		
MODEL	SCALE	SIZE
OPTIMA XE	1:	A4

TABLE NO. 023 : OPTIMA XE STICKER

REF NO.	PART NO.	DESCRIPTION	Q'TY	UNIT	MATERIAL	FROM	TO	REPLACED NO.
1	70904	Attention sticker	1	EA				
2	28-80022	Start up & Shut down Instruction sticker, XD/E	1	EA				
2	28-80023	Start up & Shut down Instruction sticker, Asia XD/E	(1)	EA				
3	70890	Label specification, OPTIMA	1	EA				
4	70934	Attention & Caution sticker	1	EA				
5	28-80035	Certification logo, XD/E	1	EA				
6	28-80039	Water tank sticker, XD/E	1	EA				

TABLE NO. 024

STANDARD ACCESSORIES

A. K26 STEAM GUN WITH NOZZLE

B. K26 STEAM GUN WITH QUICK COUPLER

C. SILENCE STEAM NOZZLE WITH QUICK PLUG

D. STEAM NOZZLE 3.5 WITH QUICK PLUG

E. STEAM HOSE 5-POLY 3/8, 10m

OPTIONAL ACCESSORIES

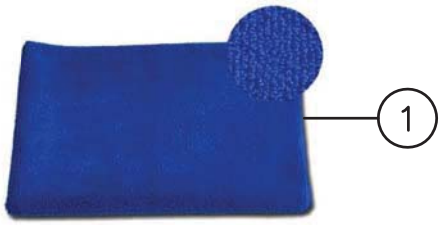

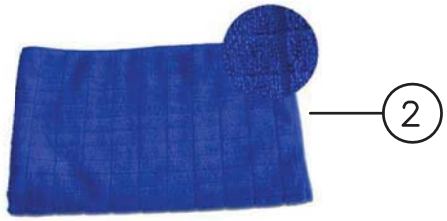

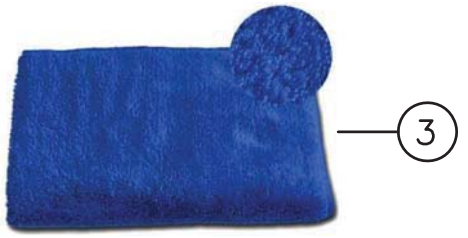

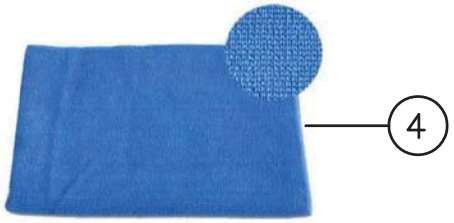

DRAFTED BY	CHECKED BY	APPROVED BY	DRW. DATE
JD.LEE	YM.LEE	TW.KWON	2016.01.01

SJE Corporation, Ltd.
Global Leader of Green solutions

TITLE: ACCESSORIES & OPTIONAL PARTS

MODEL	SCALE	SIZE
-	1: 1	A4

TABLE NO. 024 : ACCESSORIES & OPTIONAL PARTS

REF NO.	PART NO.	DESCRIPTION	Q'TY	UNIT	MATERIAL	FROM	TO	REPLACED NO.
A	A70015	Steam Gun K26 with nozzle 3.5	1		STANDARD			
B	A70274	Steam Gun K26, SC20	1		STANDARD	2013.01		
C	A70026	Steam Nozzle 3.5, SCP30	1		STANDARD	2013.01		
D	A71607	Silence steam nozzle, SCP30	1		STANDARD	2013.01		
E	A70030	Steam hose PTFE 6-8, 10m	2	PIFE	STANDARD			
1	A71311	Microfiber towel FBZ, blue (20sheets)			OPTINAL			
2	A71312	Microfiber towel Warp knitted, blue (20sheets)			OPTINAL			
3	A71313	Microfiber towel Wool, blue (20sheets)			OPTINAL			
4	A71314	Microfiber towel Double warp knitted, blue (20sheets)			OPTINAL			
5-1	A70039	Power steam hose PTFE 8-10, 10m		PIFE	OPTINAL			
5-2	A70059	Power steam hose PTFE 8-10, 15m		PTFE	OPTINAL			
5-3	A70060	Power steam hose PTFE 8-10, 20m		PTFE	OPTINAL			
6-1	A70057	Steam hose PTFE 6-8, 15m		PTFE	OPTINAL			
6-2	A70058	Steam hose PTFE 6-8, 20m		PTFE	OPTINAL			

TABLE NO.025

1. Preparation

1. Disassemble ①Plug from the steamer,
   and then assemble it to ④OMEGA SOFTENER.
2. Loosen the ②SCREW and remove ③HANDLE CAP.

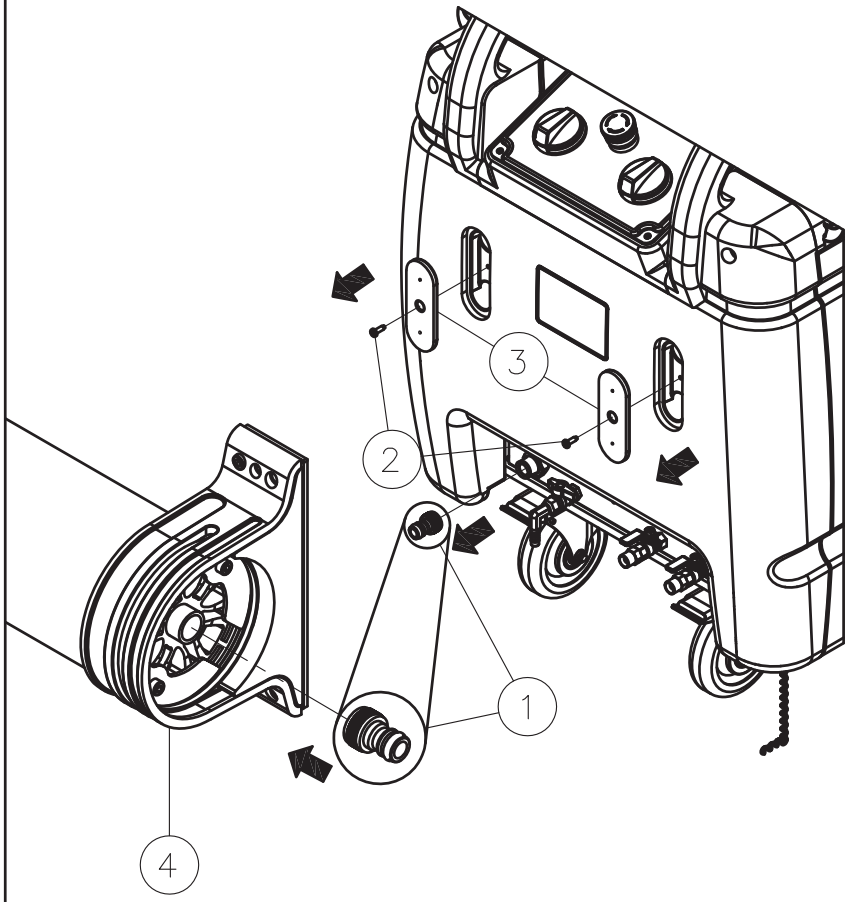

2. Installation

1. Tighten ⑤BOLT to the steamer by passing through
   ④OMEGA SOFTENER and ⑥RING ROD like below picture.
2. Connect the ⑦HOSE between the steamer and ④OMEGA SOFTENER.
3. Connect the automatic water supply line.

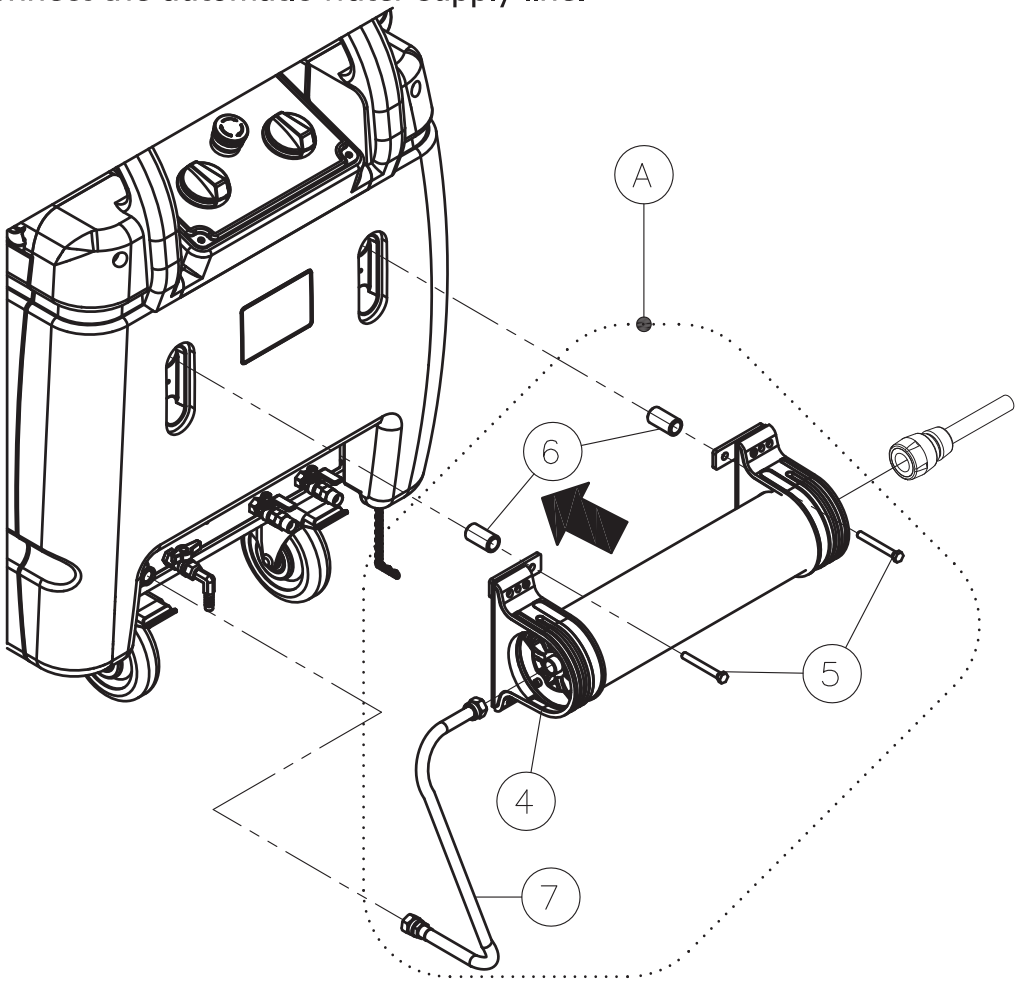

DRAFTED BY	CHECKED BY	APPROVED BY	DRW. DATE
JD.LEE	YM.LEE	TW.KWON	2018.01.01

SJE Corporation, Ltd.
Global Leader of Green solutions

TITLE			
OMEGA SOFTNER(OPTIONAL)			
MODEL	SCALE	SIZE	
OPTIMA XE	1: 6	A4	

TABLE NO. 025 : OMEGA SOFTNER(OPTIONAL)

REF NO.	PART NO.	DESCRIPTION	Q'TY	UNIT	MATERIAL	FROM	TO	REPLACED NO.
1	70615	Plug G1/2F - 10.5 for Coupling	1	EA				
2	70500	Screw T/T M4.8 x 20	2	EA		2013.01		
3	20-03036	Handle cap, Red-2V	2	EA		2013.01		
4	15-50004	Water softner, Omega	1	EA		2013.01		
5	14-40047	Hex bolt M8 x 110, Zn	2	EA				
6	20-06025	Bracket Rod, Omega, XD/E	2	EA				
7	12-22004	Feedwater hose L.600	1	EA				
A	85-50048	Omega Softener kit for XD/XE	1	SET				

SJE Corporation, Ltd.
Global Leader of Green solutions

[Headquarter Office]
78-21, Sandan 7-ro, Jeonggwan-myeon, Gijang-gun, Busan, South Korea
Tel: +82 51-521-3200 | Fax: +82 505-521-3305 | Web: www.SJECorp.com

[Seoul Office]
C203, 40, Imi-ro, Uiwang-si, Gyeonggi-do , South Korea
Tel: +82 31-479-5660 | Fax: +82 505-521-3305 | Web: www.SJECorp.com

STEAMERICAS
www.steamericas.com

[US office- Steamericas, Inc.]
808 HINDRY AVENUE # E INGLEWOOD, CA 90301, United States
Tel: +1 310-327-8900 | Fax: +1 866-275-3582 | Web: www.steamericas.com